Bali Collection
G-8086-LM21E0-T
Bali M-Series Valve Trim with Two Handles

Product Features

- Two metal handles
- Decorative trim plate
- Use with M-Series rough valves

Code compliance

- ADA

Available Finishes
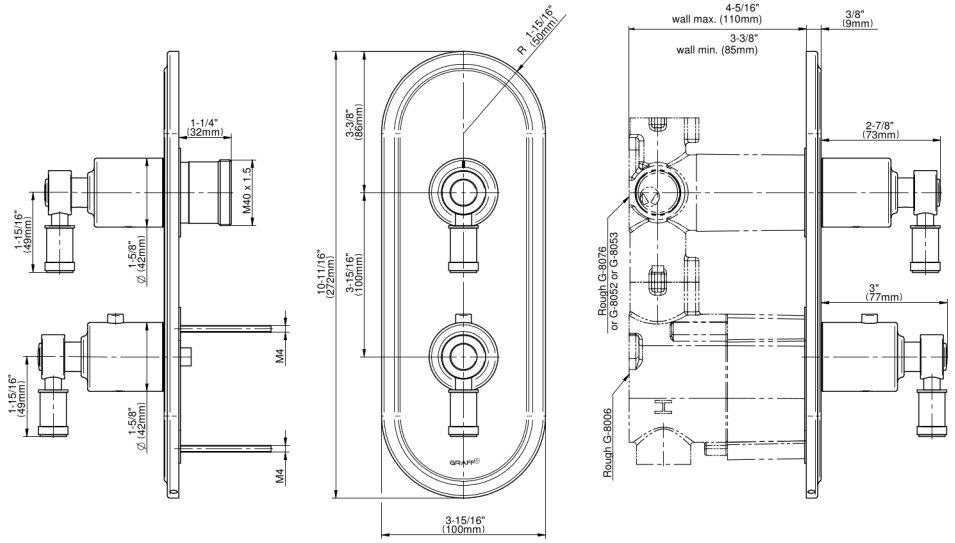
Bali Collection
G-8086-LM21E0-T
Bali M-Series Valve Trim with Two Handles