G-8057-C14E0

TARGA Series

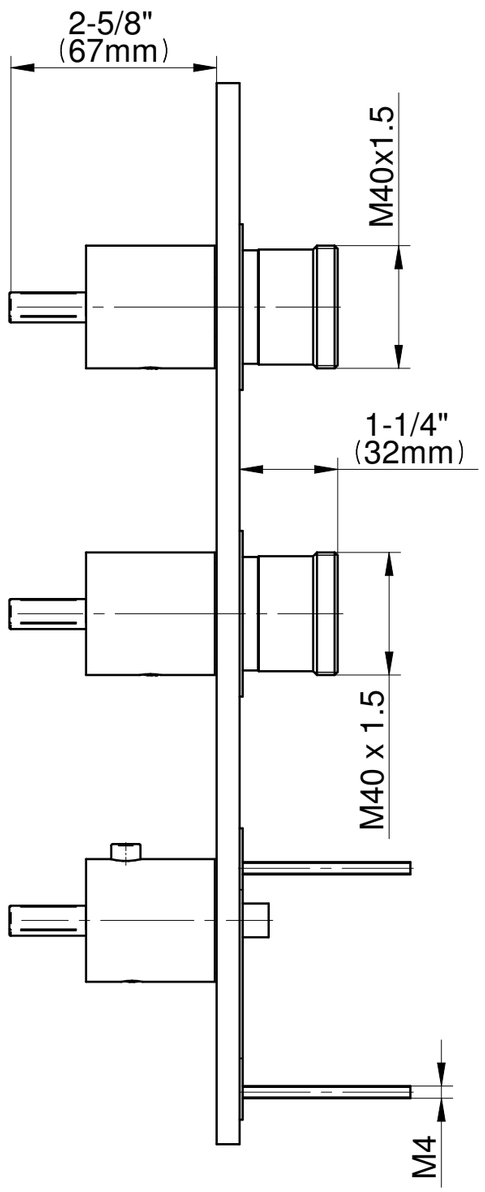

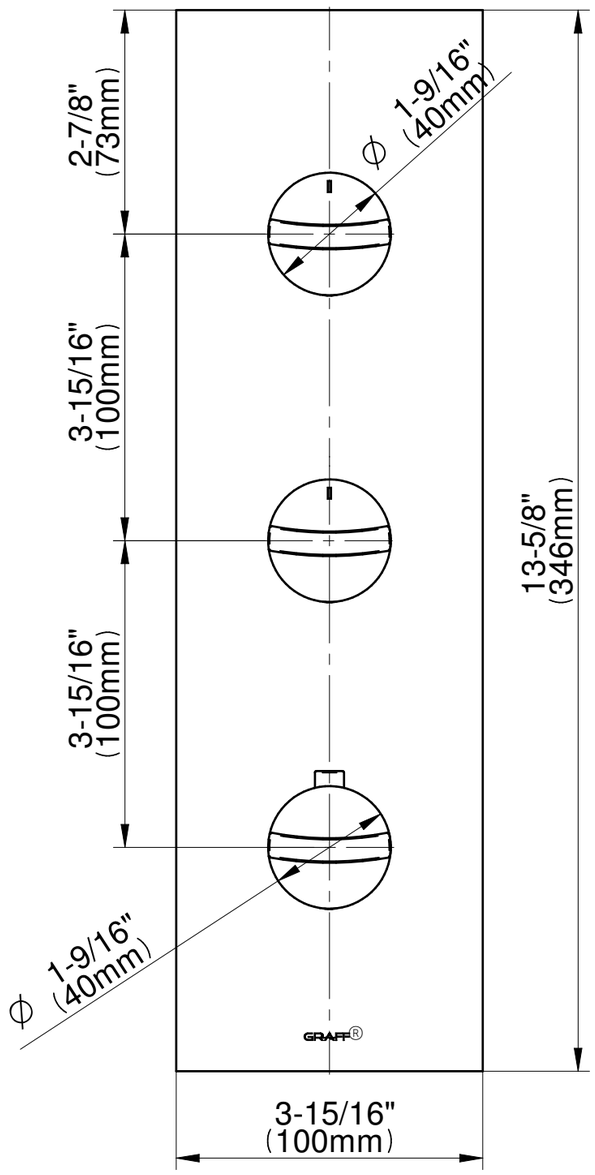

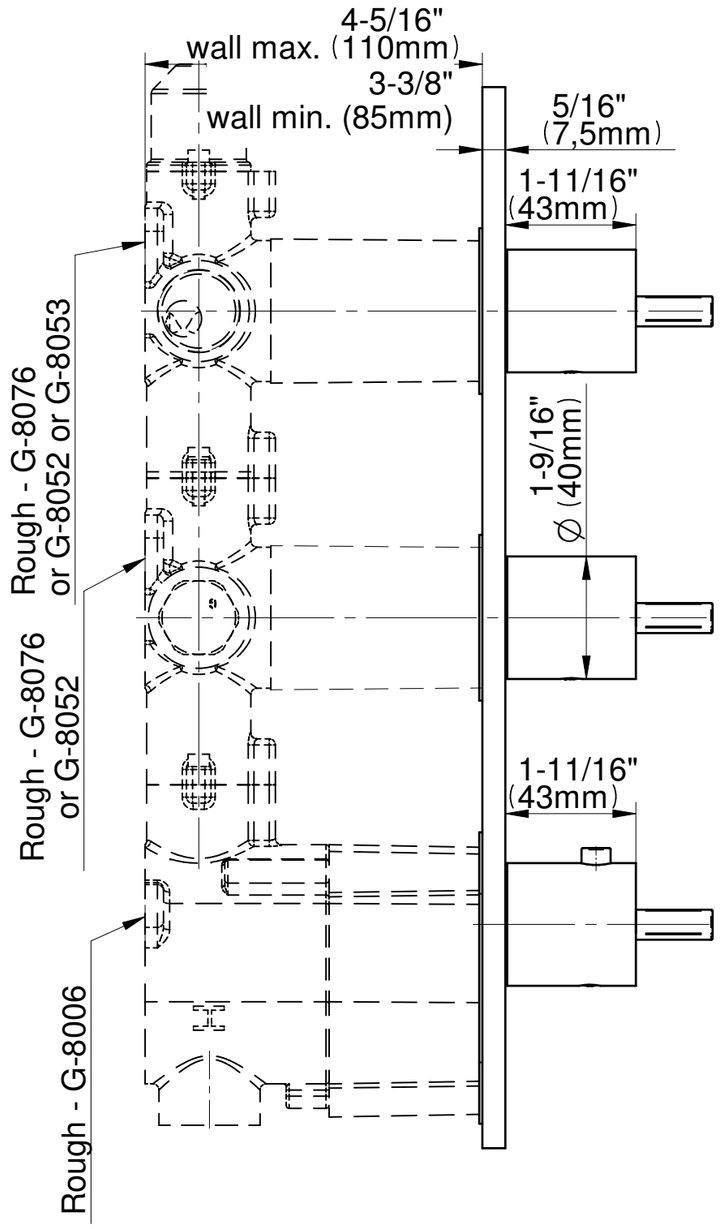

GRAFF®

CUTTING EDGE DESIGN