G-6053
LUNA Series

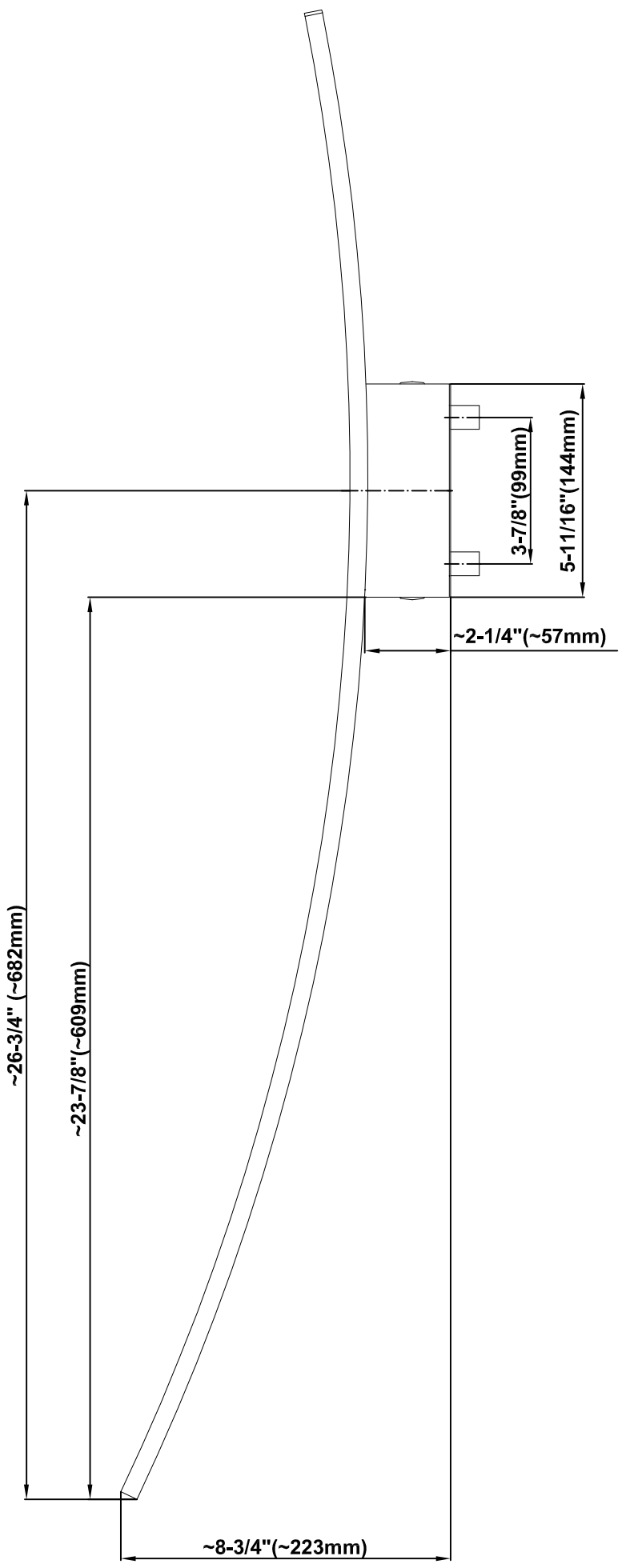

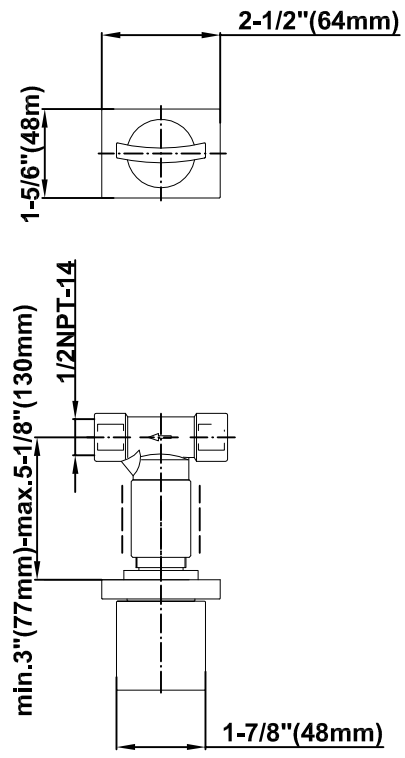

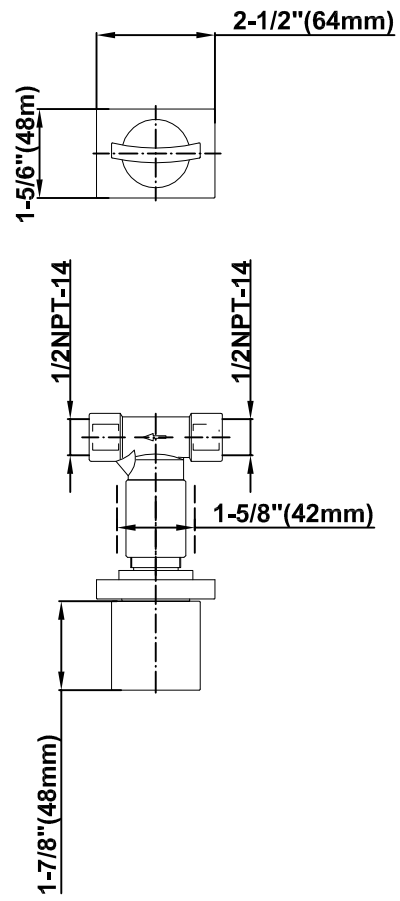

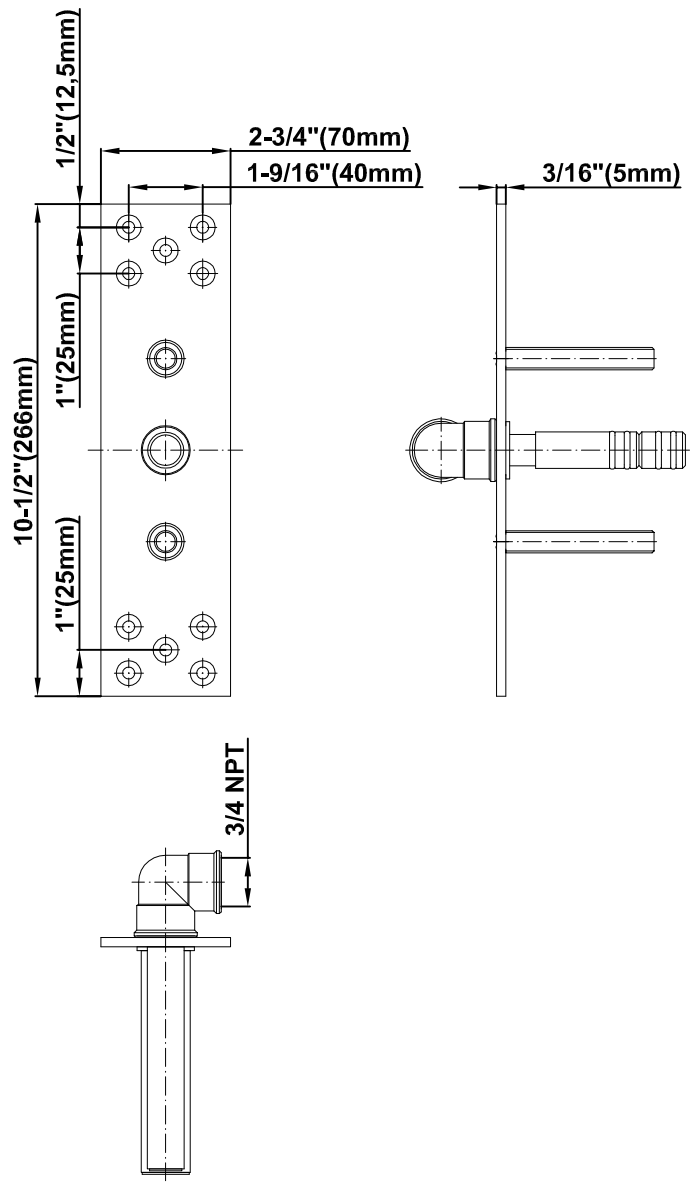

GRAFF®
CUTTING EDGE DESIGN