G-19305
VIGNOLA Series

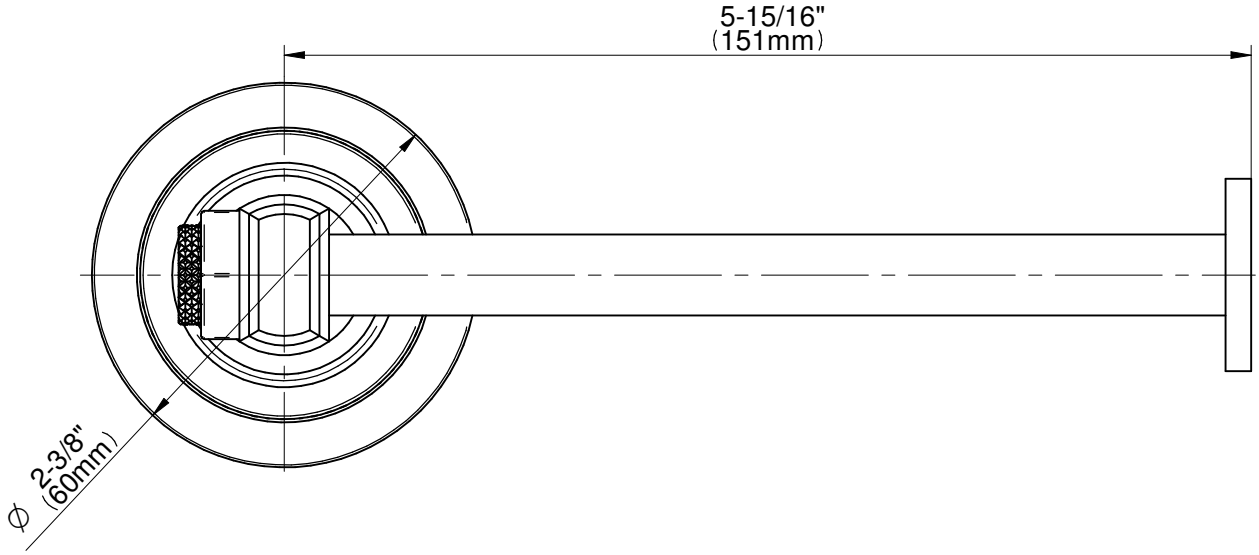

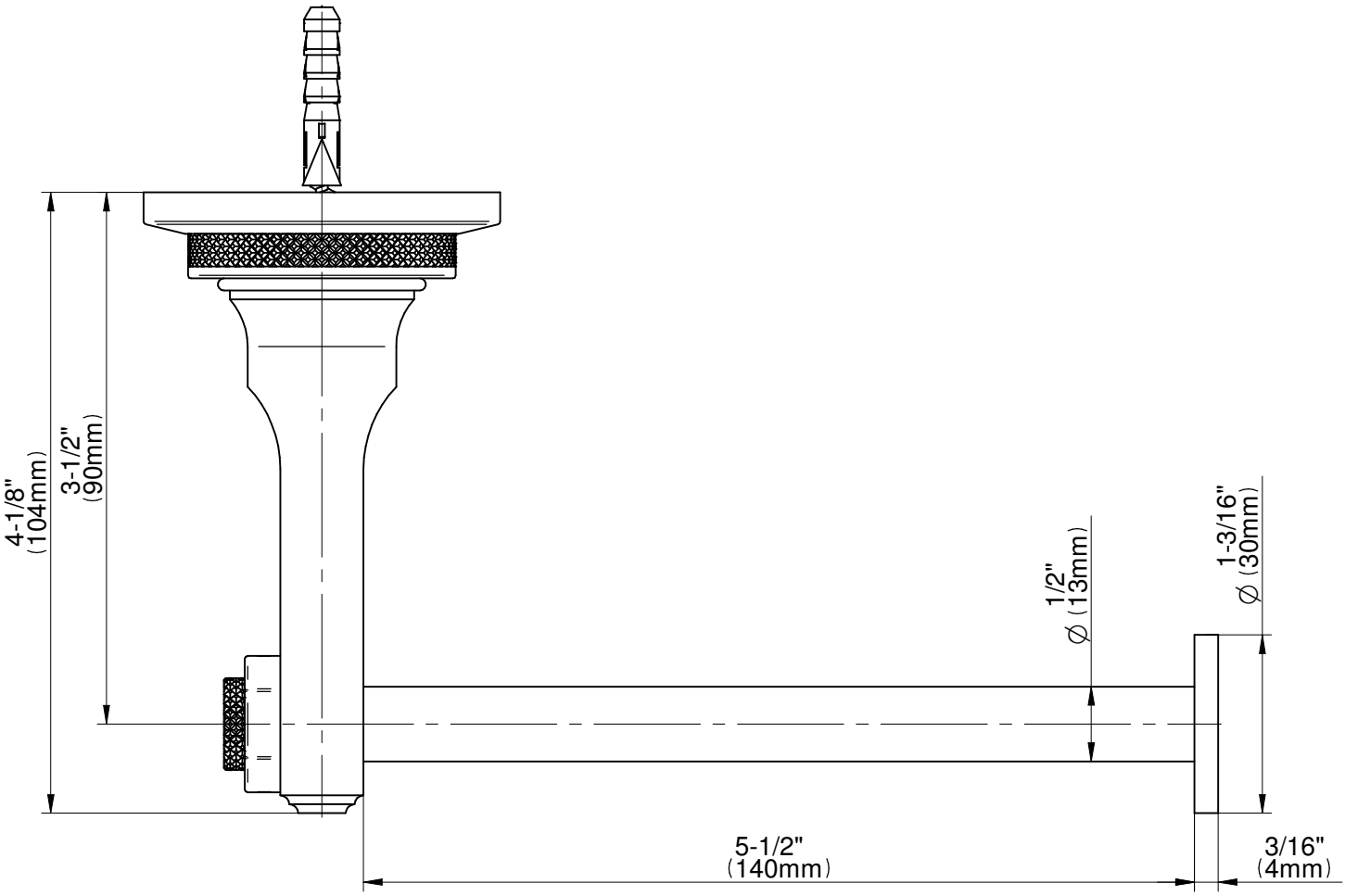

GRAFF®
Art of Bath