Bali Collection
**G-8600-LM21B**
Traditional Handshower with Wall-Mounted Slide Bar

## Product Features

- 22
- 59
- Includes traditional handshower - G-8604
- Adjustable bracket fits all hoses with conical nut
- Includes 1/2
- Includes internal backflow preventer
- Handshower flow rate ? 1.5 max gpm

## Code compliance

- ADA

## Available Finishes

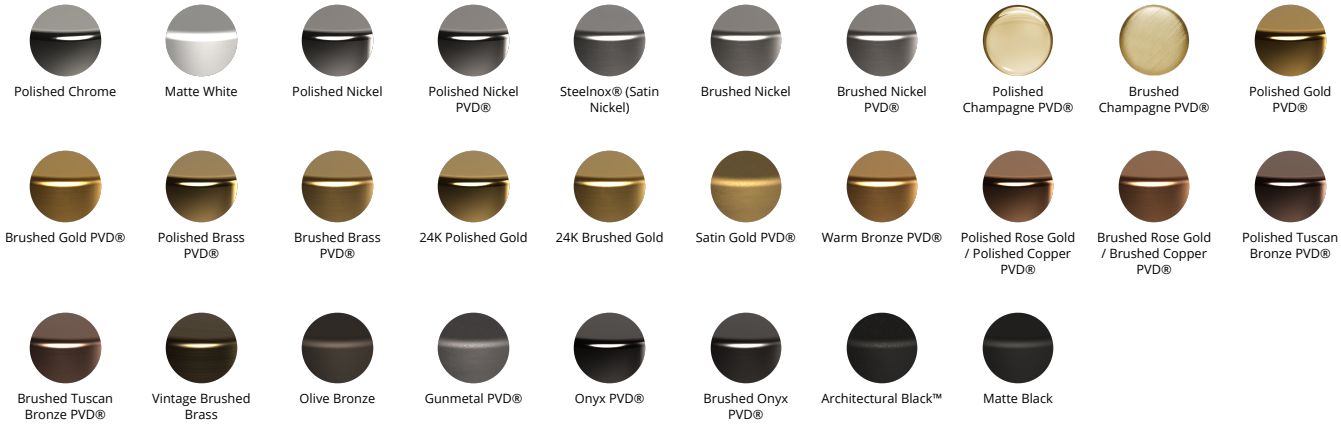
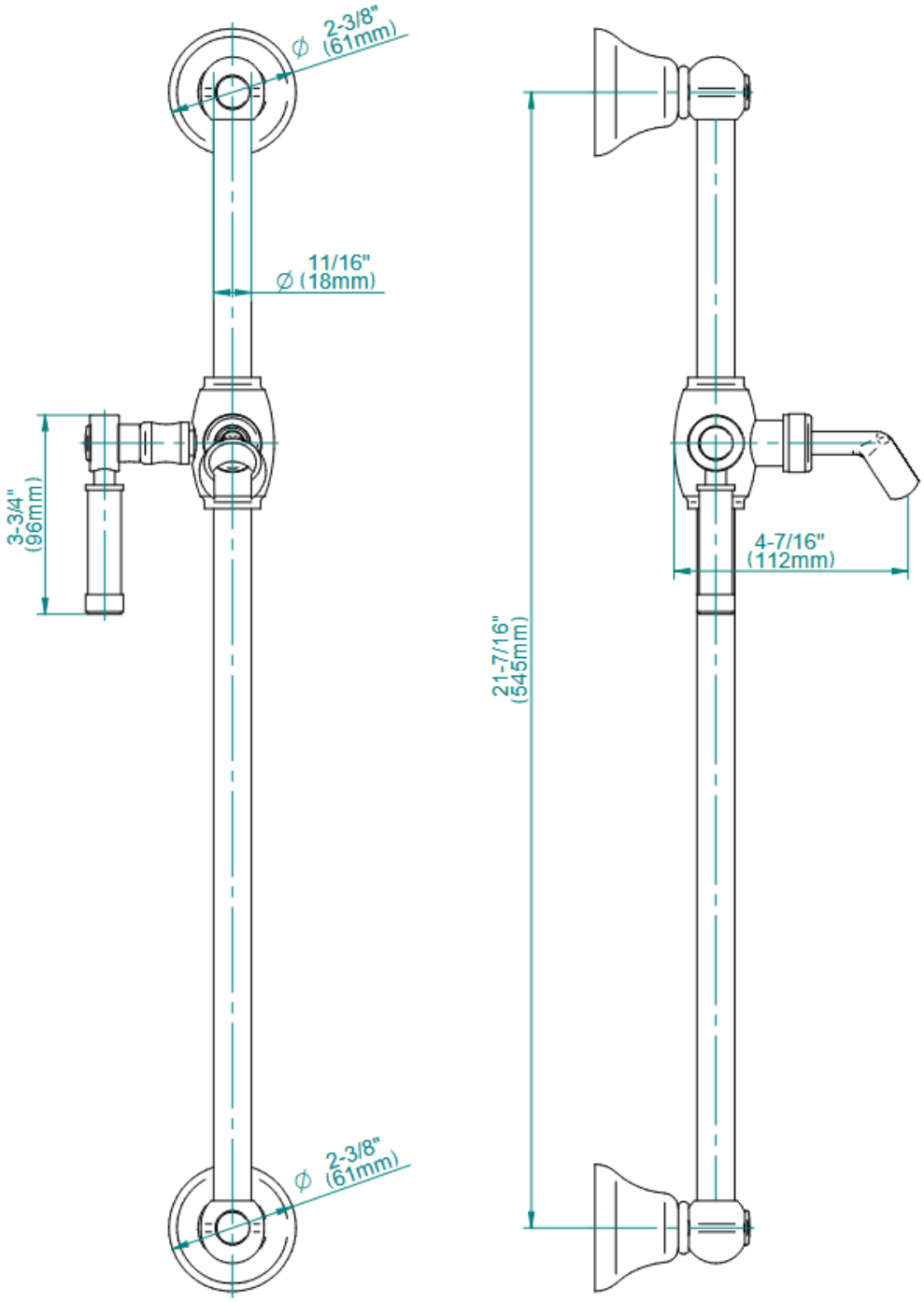
Bali Collection
**G-8600-LM21B**
Traditional Handshower with Wall-Mounted Slide Bar