RIVA Collection
G-18024VBF-T
RIVA Contemporary 4-button paired knob fluted knurl vertical trim

Available Finishes

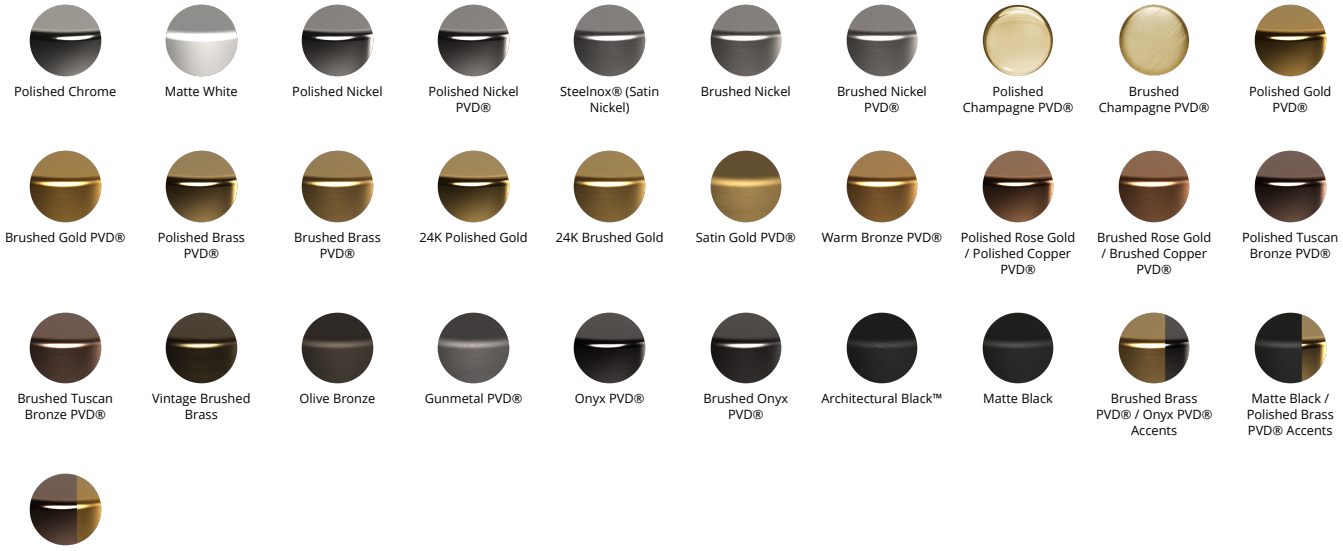
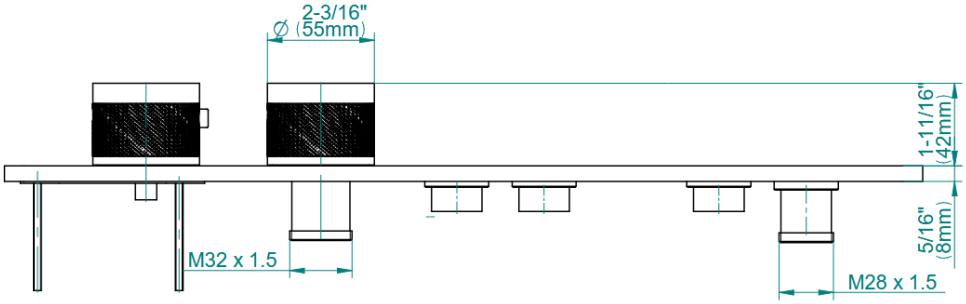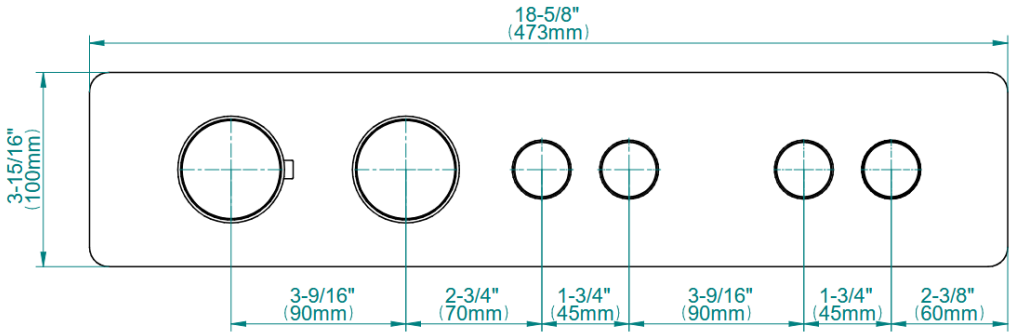
RIVA Collection
G-18024VBF-T
RIVA Contemporary 4-button paired knob fluted knurl vertical trim