RIVA Collection
G-18015VBF-T
RIVA Traditional 5-button paired knob fluted knurl vertical trim

Available Finishes

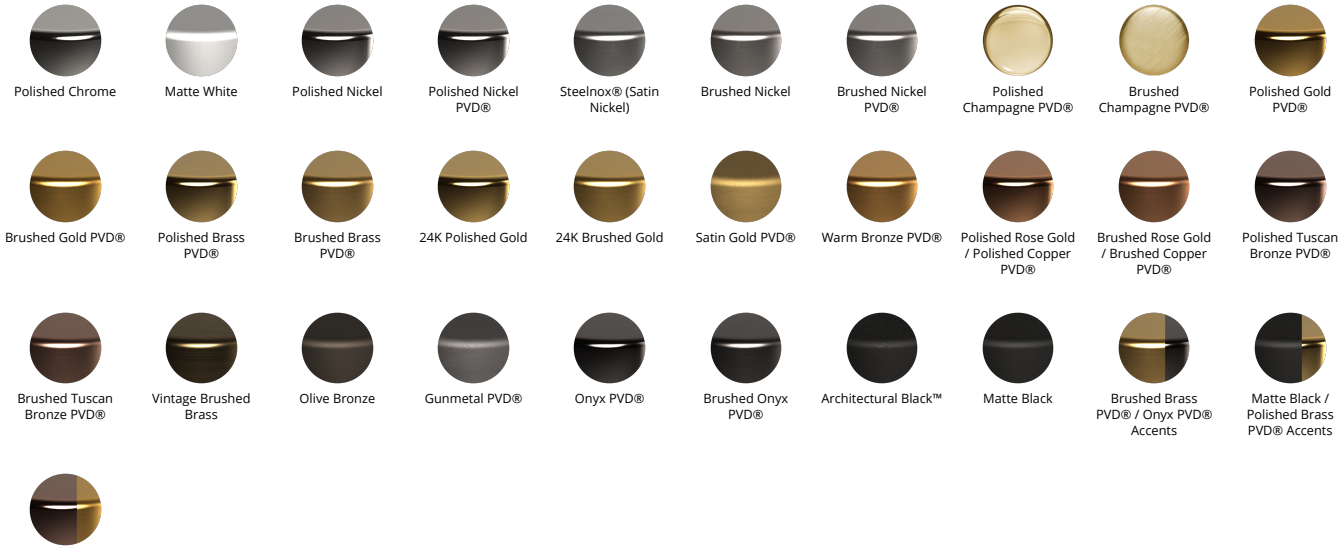
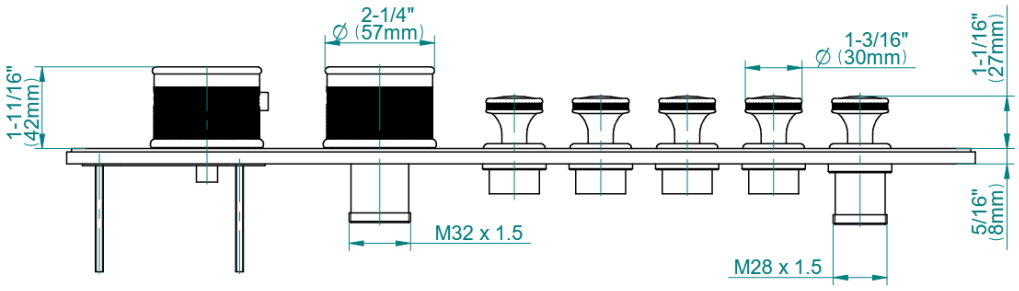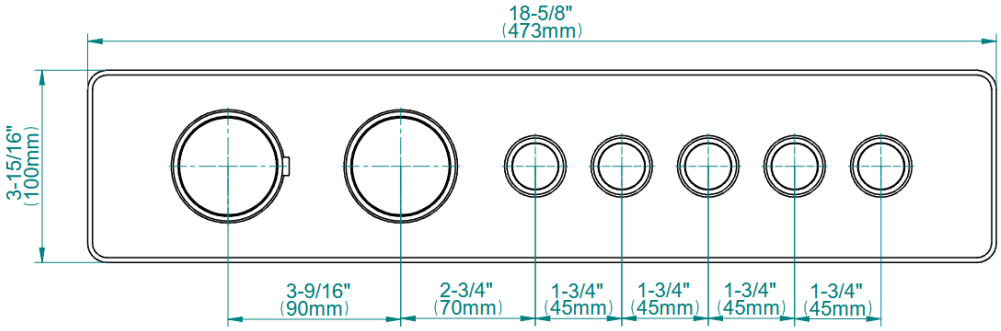
RIVA Collection
G-18015VBF-T
RIVA Traditional 5-button paired knob fluted knurl vertical trim