RIVA Collection
G-18015VAQ-T
RIVA Traditional 5-button split knob oblique knurl vertical trim

Available Finishes

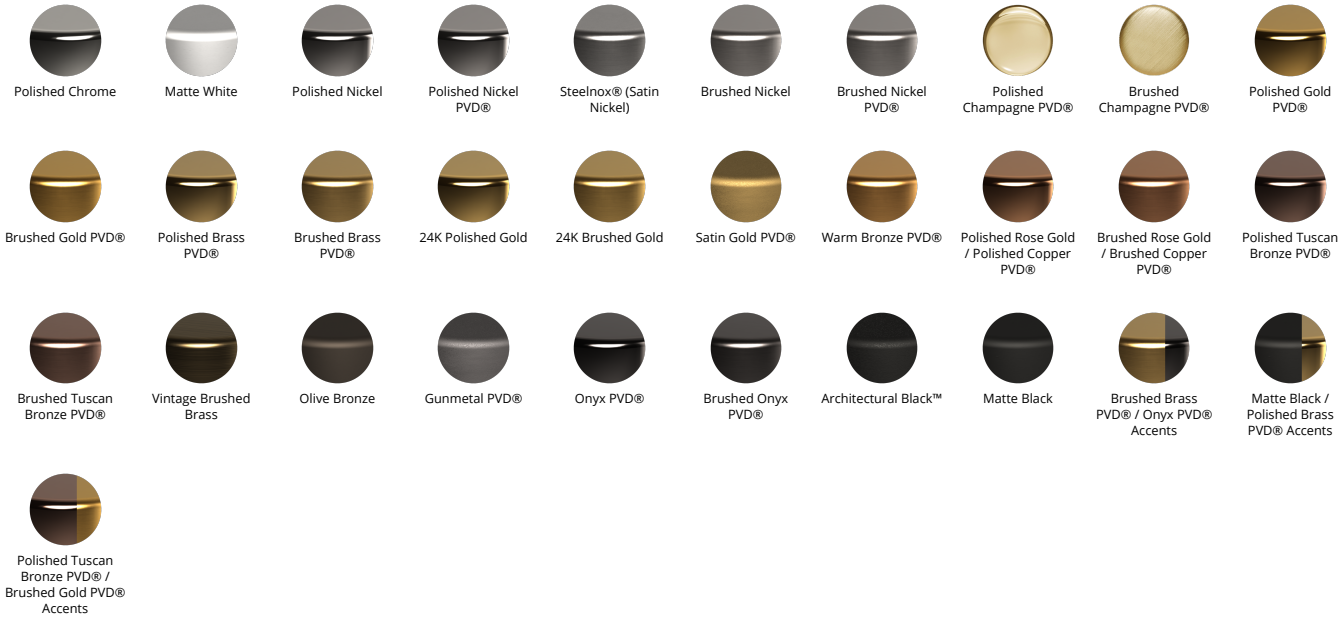
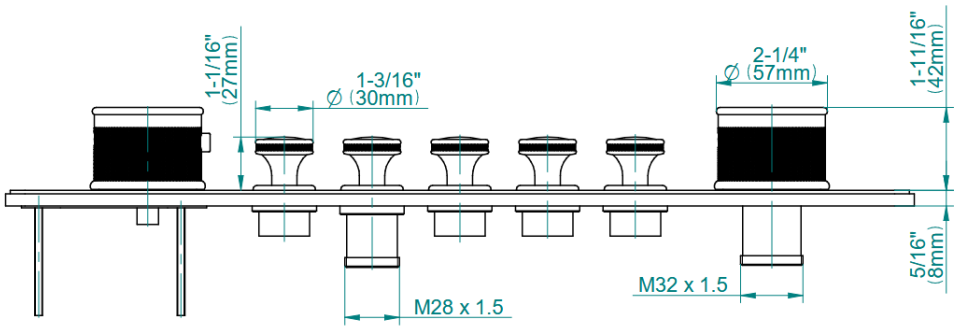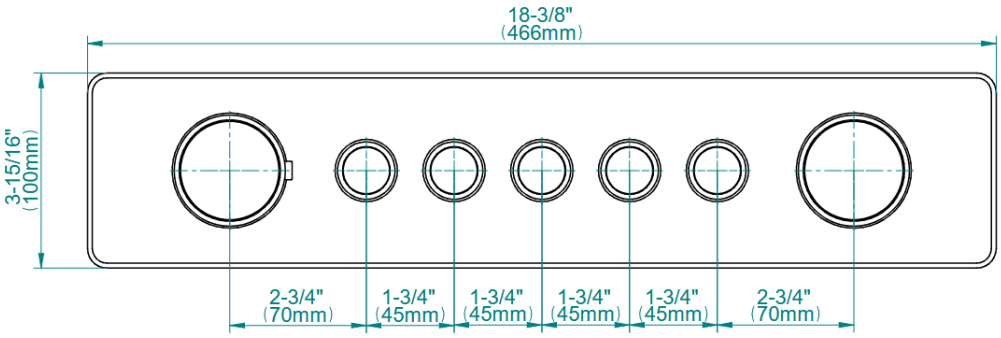
RIVA Collection
G-18015VAQ-T
RIVA Traditional 5-button split knob oblique knurl vertical trim