RIVA Collection
G-18024HBQ-T
RIVA Contemporary 4-button paired knob oblique knurl horizontal trim

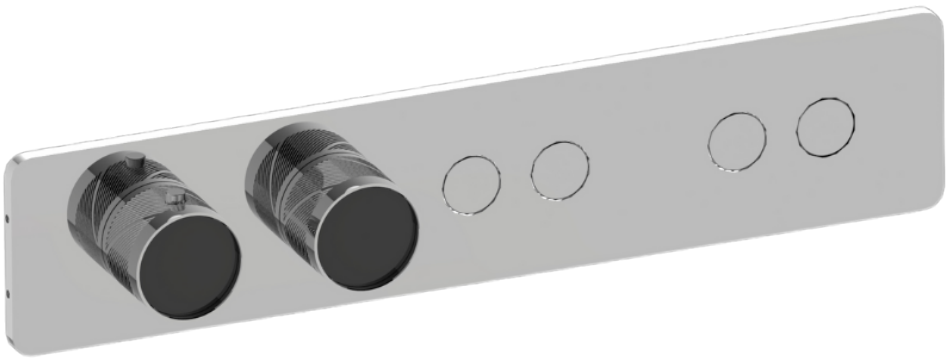

Available Finishes

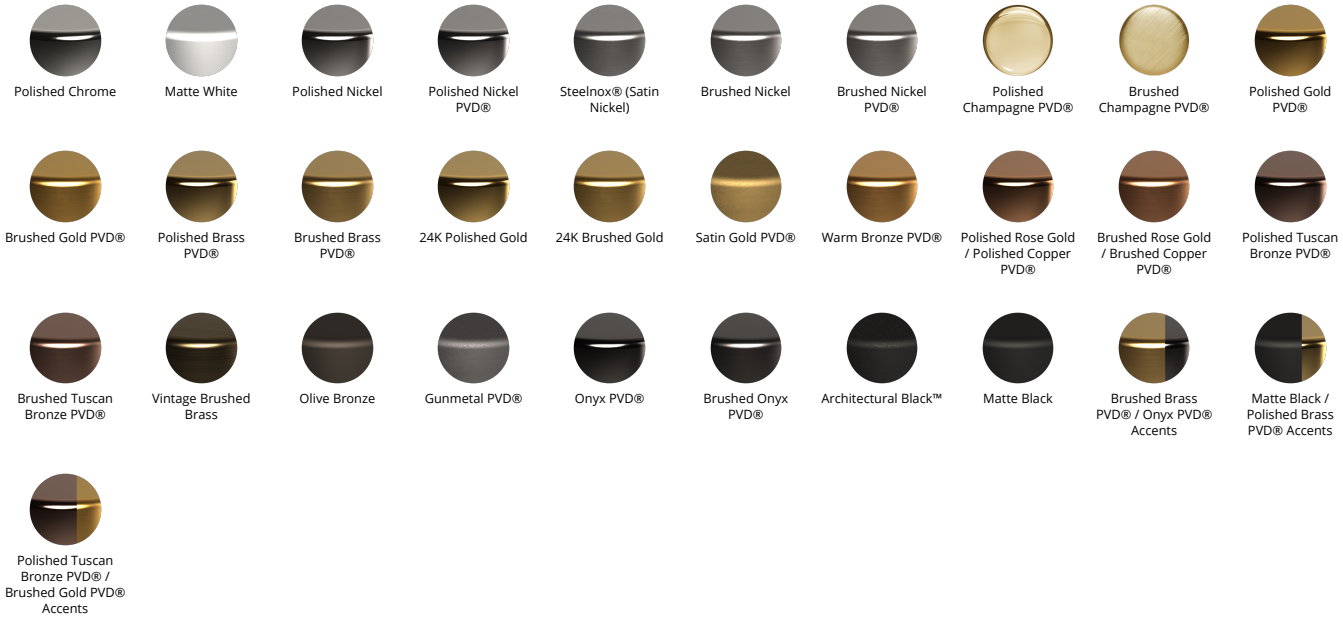
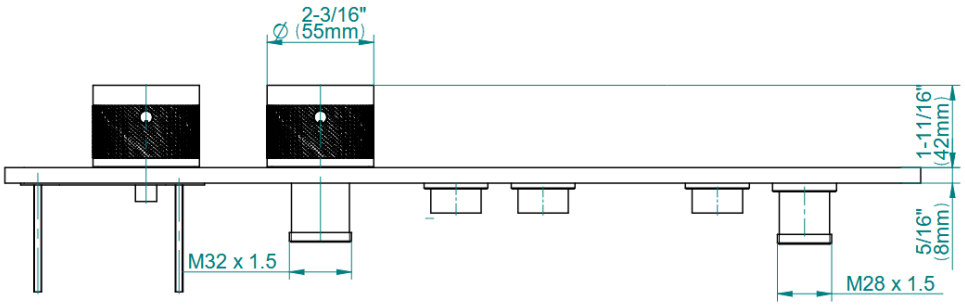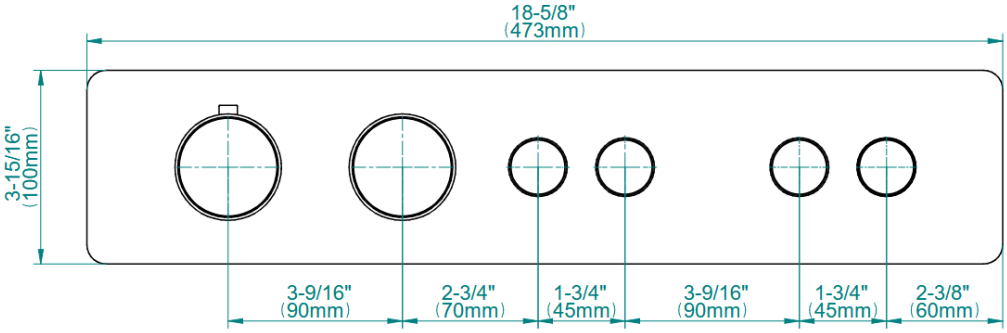
RIVA Collection
G-18024HBQ-T
RIVA Contemporary 4-button paired knob oblique knurl horizontal trim