RIVA Collection
G-18024HBD-T
RIVA Contemporary 4-button paired knob diamond knurl horizontal trim

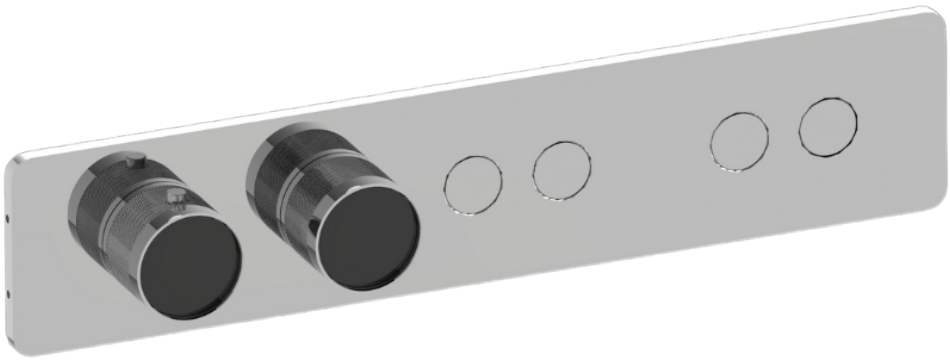

Available Finishes

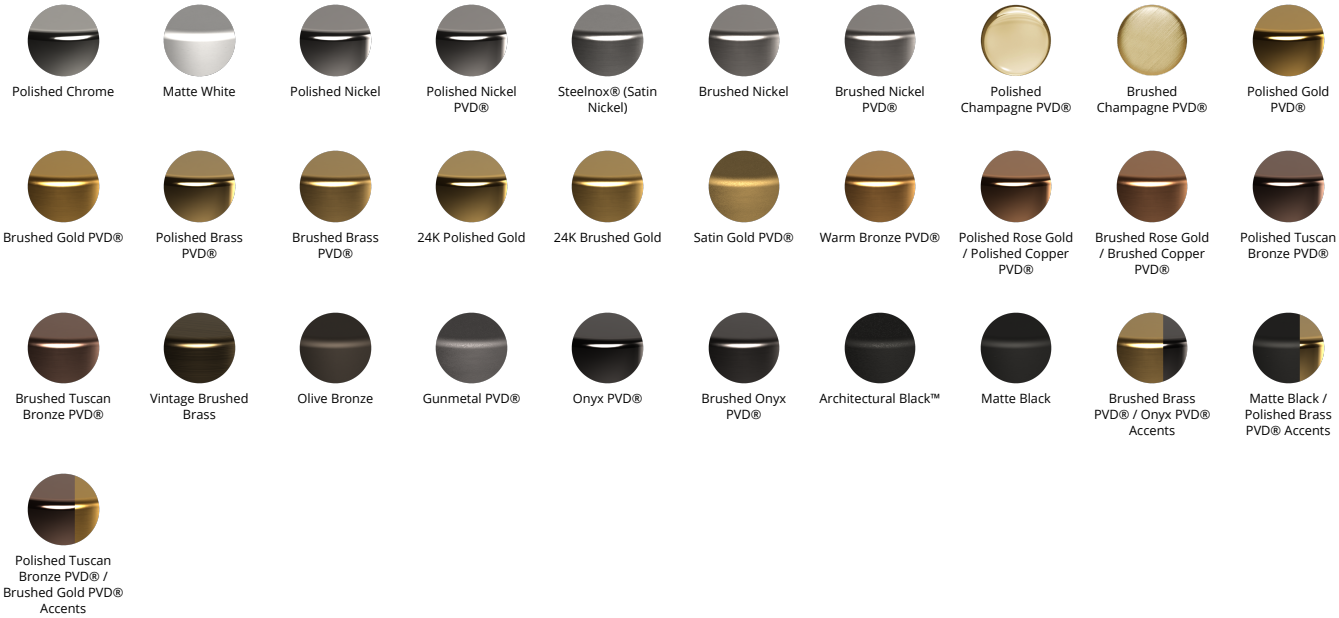
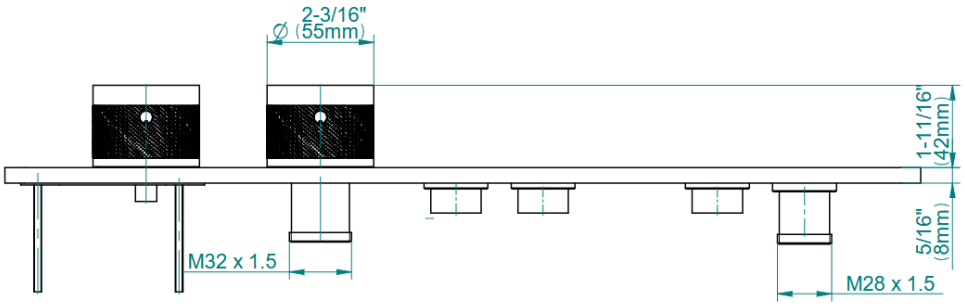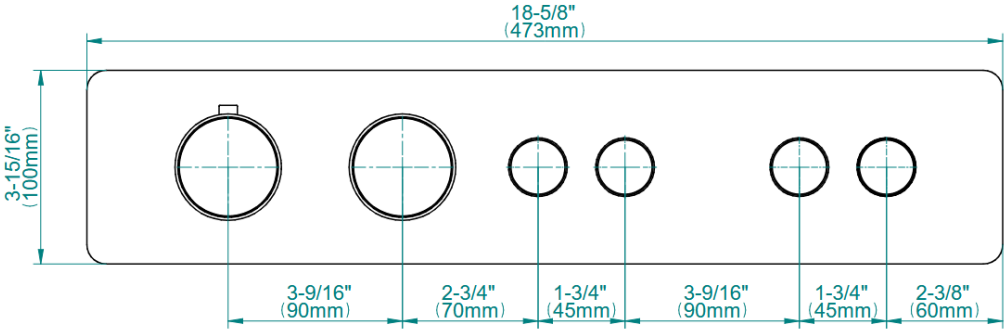
RIVA Collection
G-18024HBD-T
RIVA Contemporary 4-button paired knob diamond knurl horizontal trim