RIVA Collection
**G-18025HBP-T**
RIVA Contemporary 5-button paired knob horizontal trim

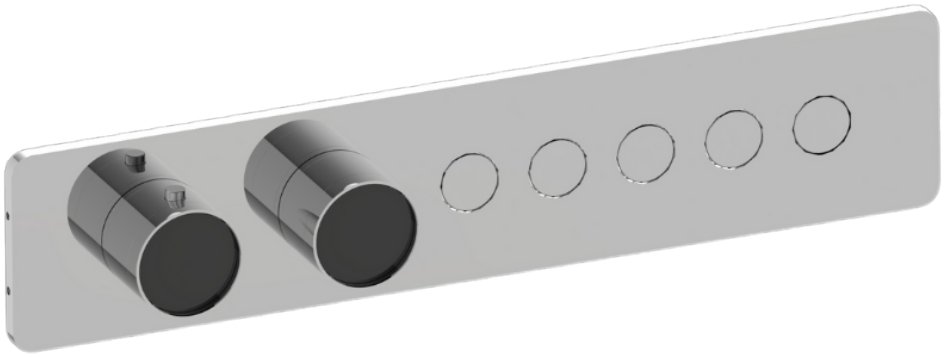

## Available Finishes

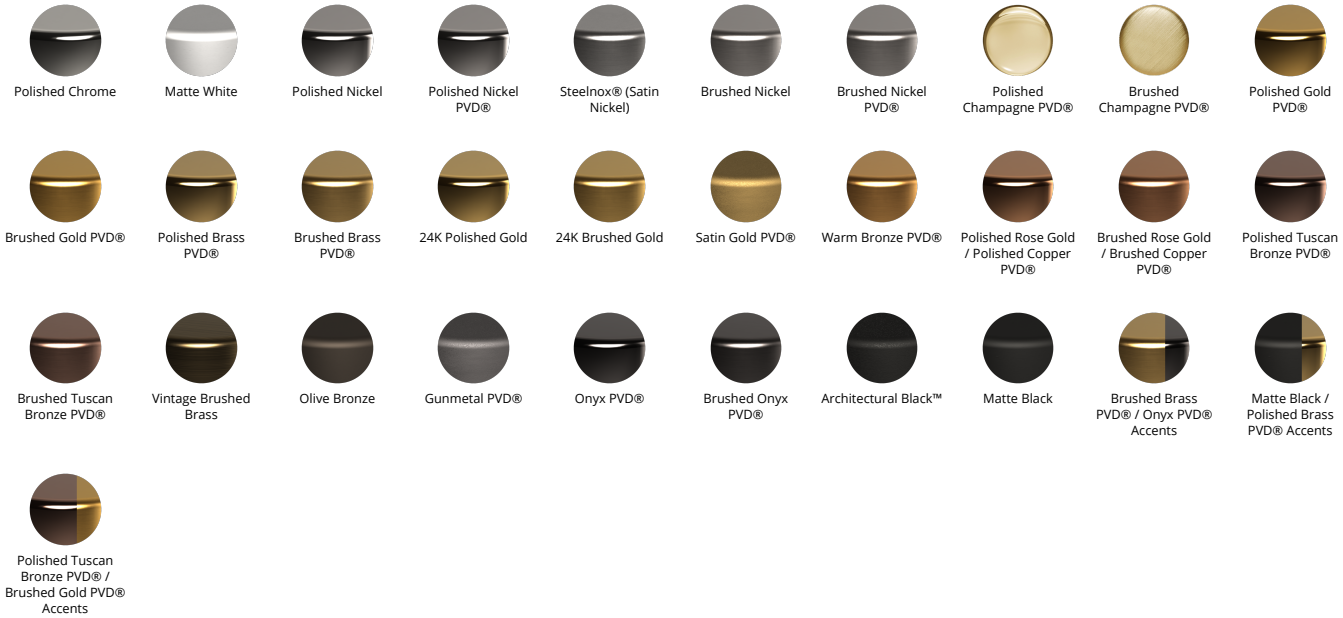
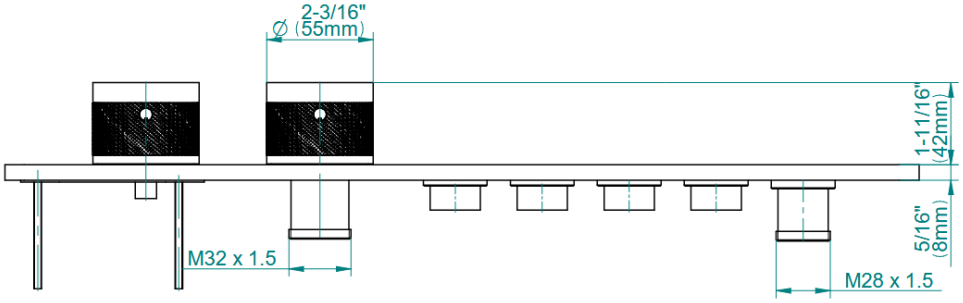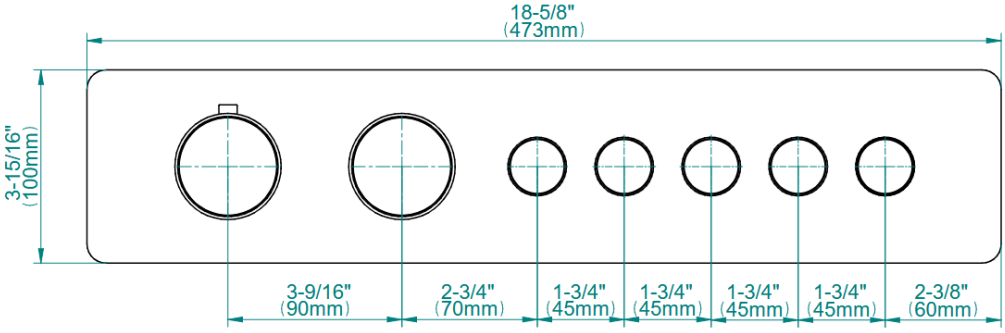
RIVA Collection
**G-18025HBP-T**
RIVA Contemporary 5-button paired knob horizontal trim