RIVA Collection
G-18025HBF-T
RIVA Contemporary 5-button paired knob fluted knurl horizontal trim

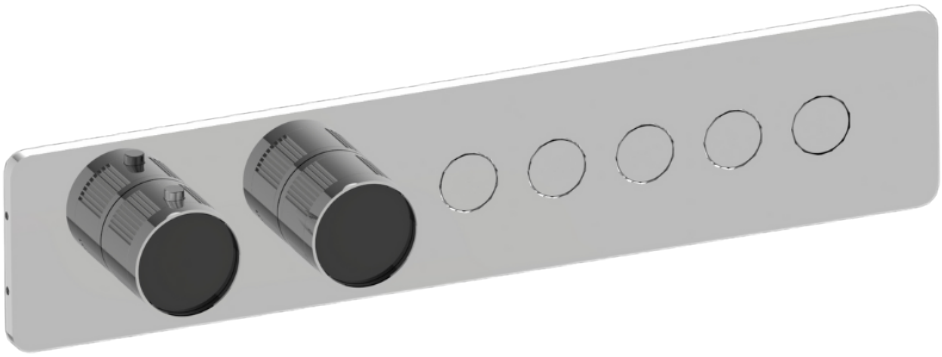

Available Finishes

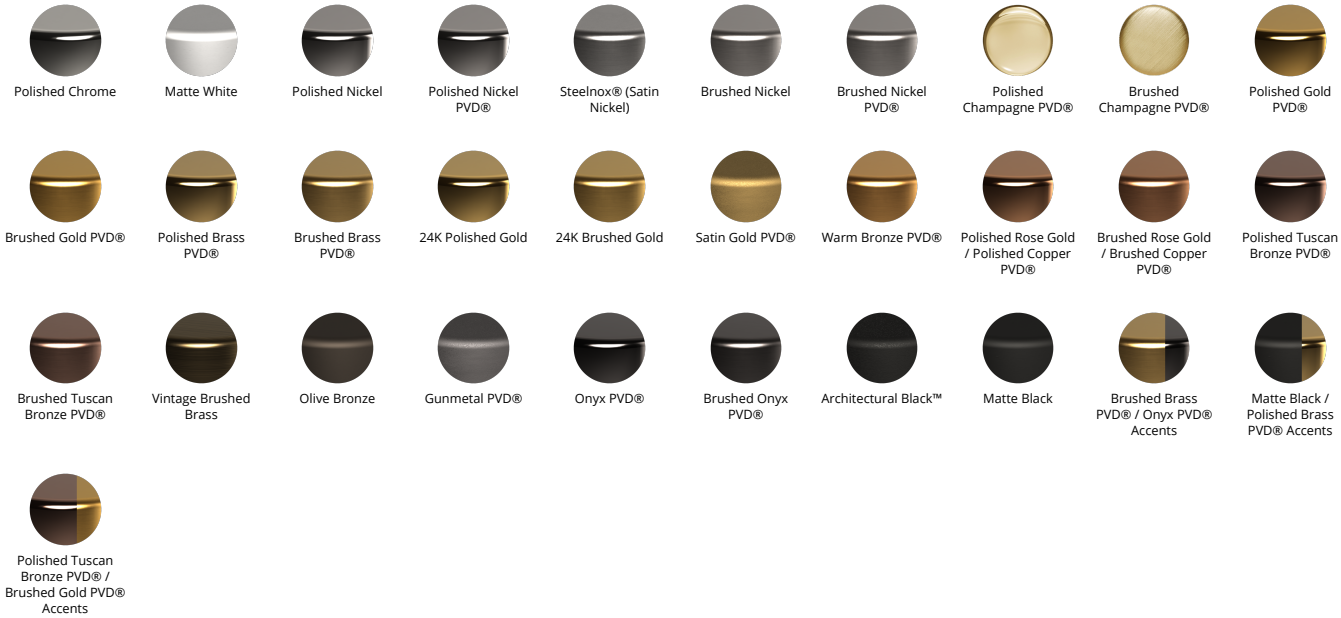
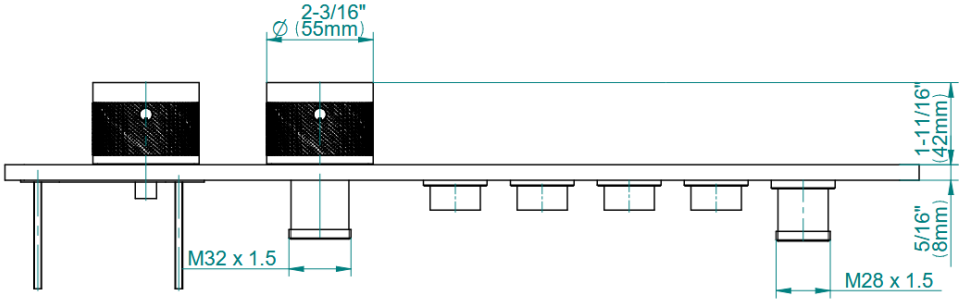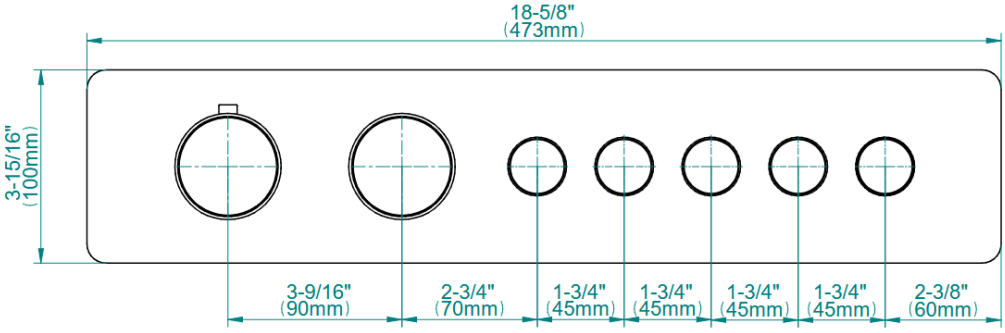
RIVA Collection
G-18025HBF-T
RIVA Contemporary 5-button paired knob fluted knurl horizontal trim