RIVA Collection
G-18013VAF-T
RIVA Traditional 3-button split knob fluted knurl vertical trim

Available Finishes

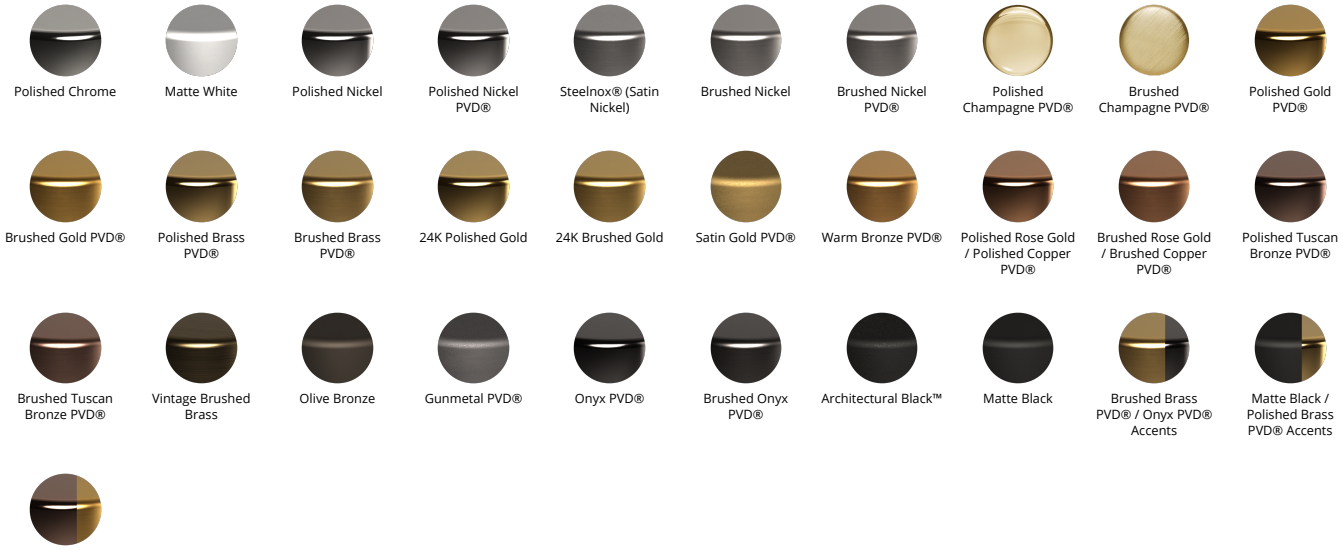
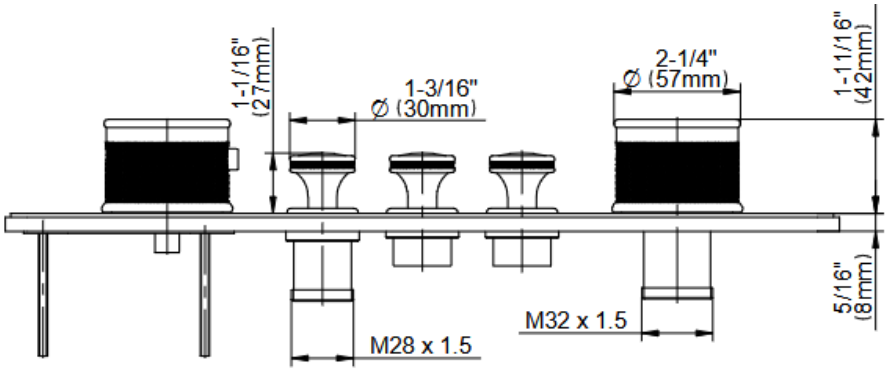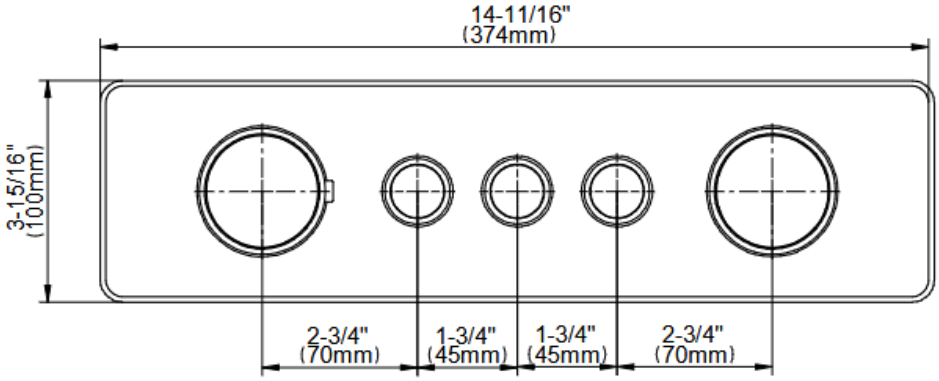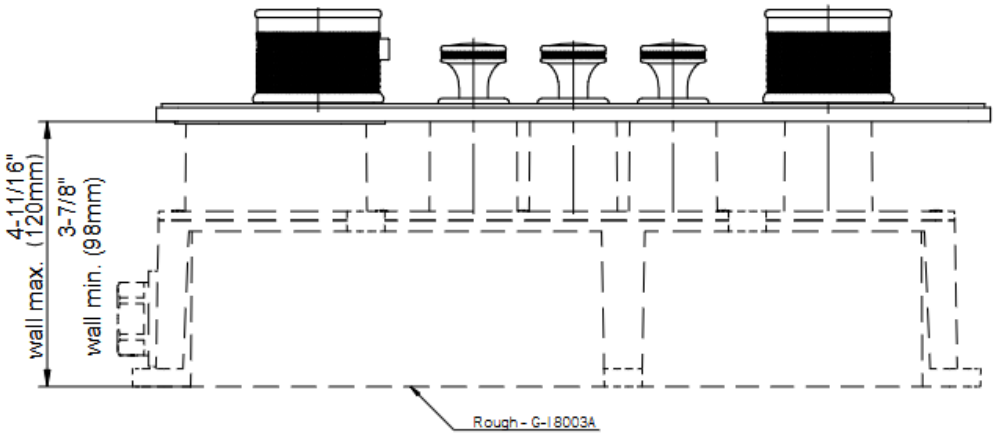
RIVA Collection
G-18013VAF-T
RIVA Traditional 3-button split knob fluted knurl vertical trim