RIVA Collection
G-18012VBD-T
RIVA Traditional 2-button paired knob diamond knurl vertical trim

Available Finishes

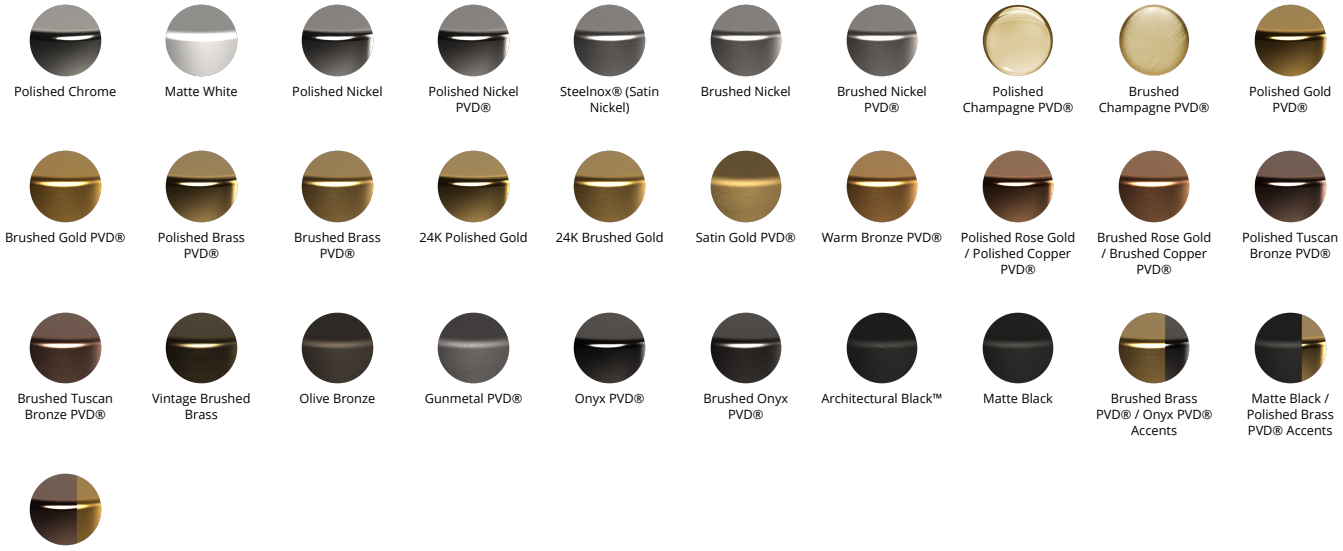
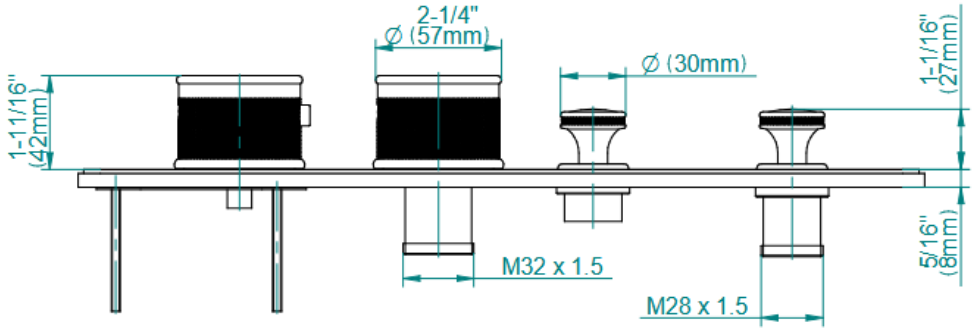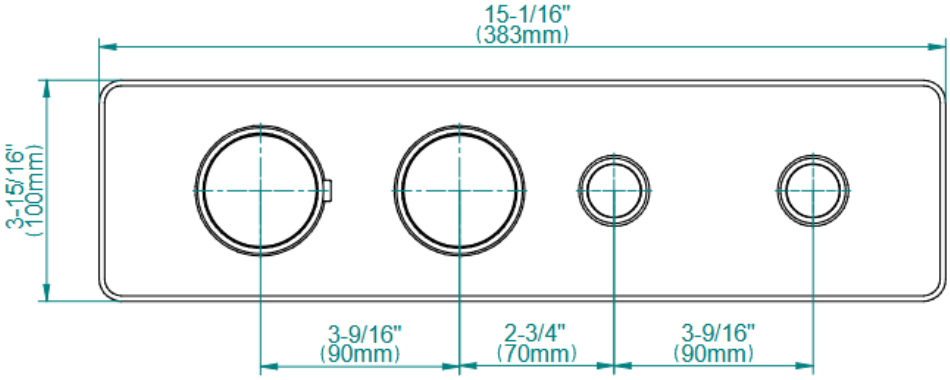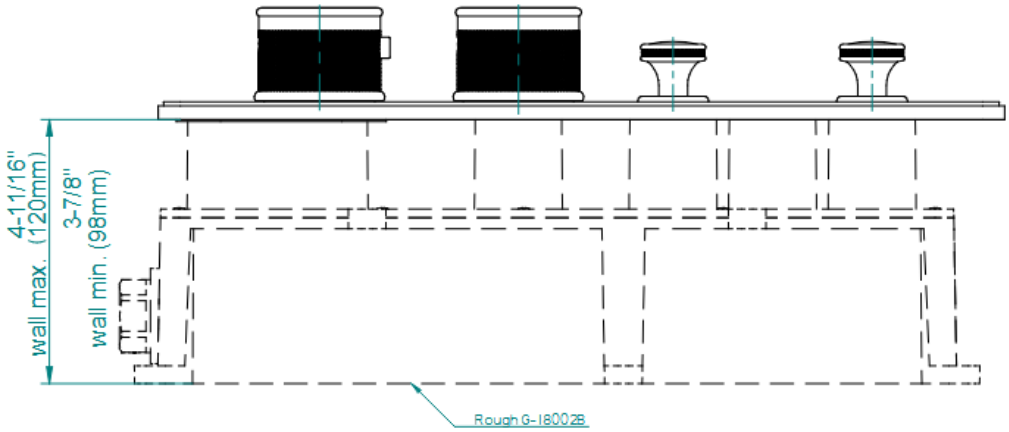
RIVA Collection
G-18012VBD-T
RIVA Traditional 2-button paired knob diamond knurl vertical trim