RIVA Collection
G-18012VAP-T
RIVA Traditional 2-button split knob vertical trim

Available Finishes

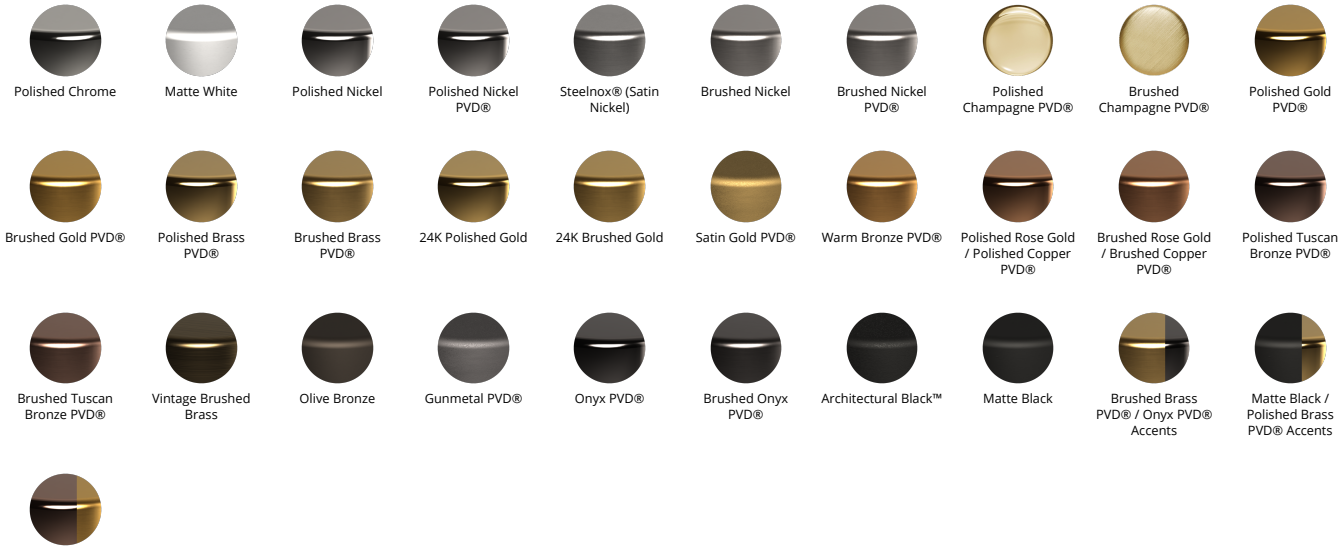
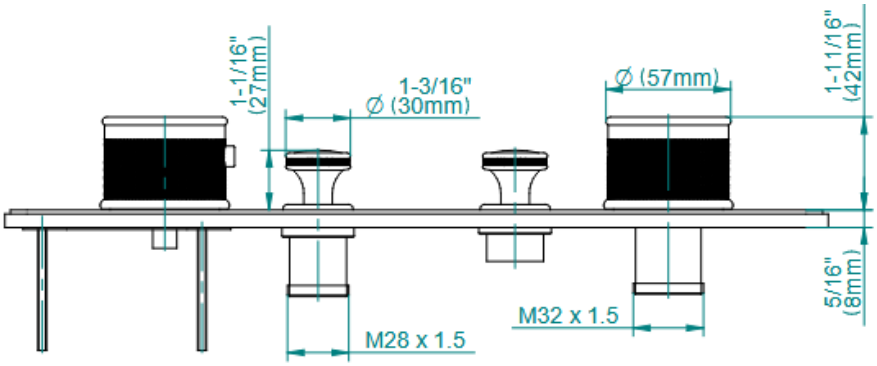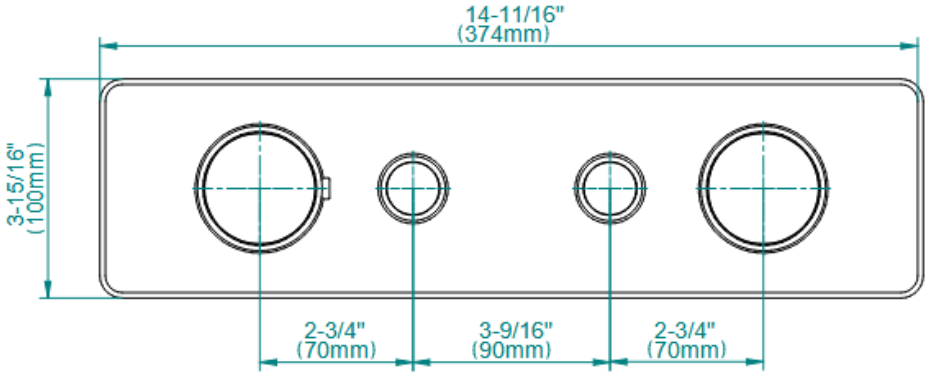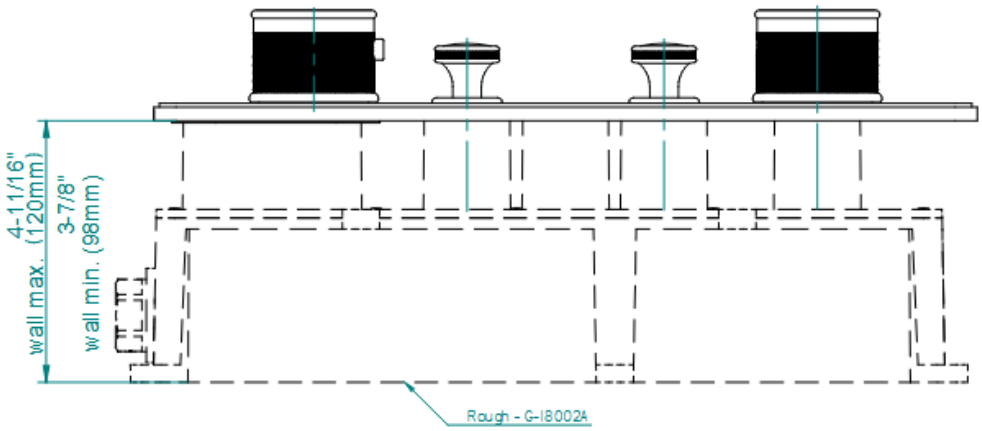
RIVA Collection
G-18012VAP-T
RIVA Traditional 2-button split knob vertical trim