RIVA Collection
G-18025HAQ-T
RIVA Contemporary 5-button split knob oblique knurl horizontal trim

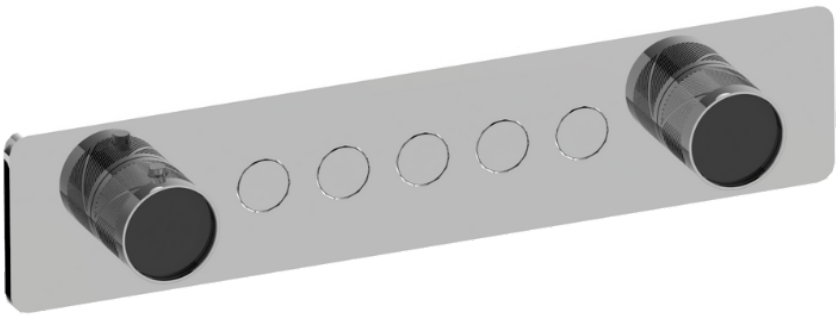

Available Finishes

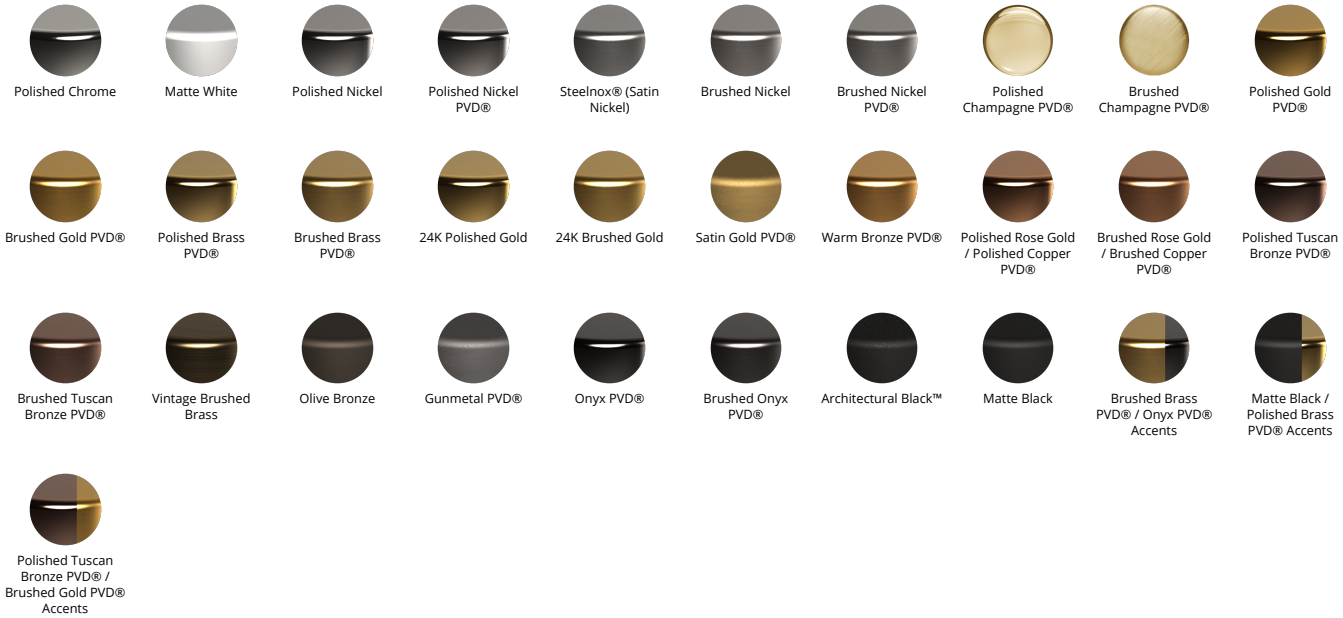
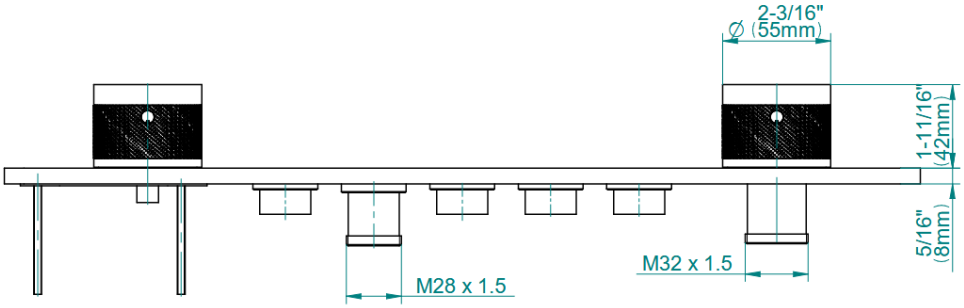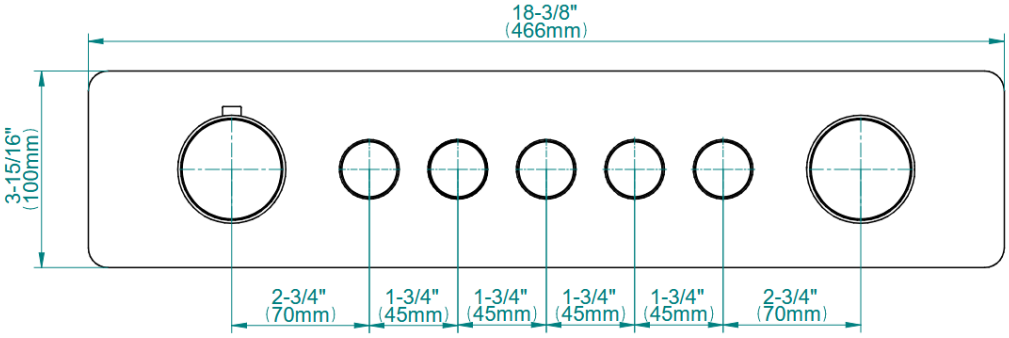
RIVA Collection
G-18025HAQ-T
RIVA Contemporary 5-button split knob oblique knurl horizontal trim