RIVA Collection
G-18025HAD-T
RIVA Contemporary 5-button split knob diamond knurl horizontal trim

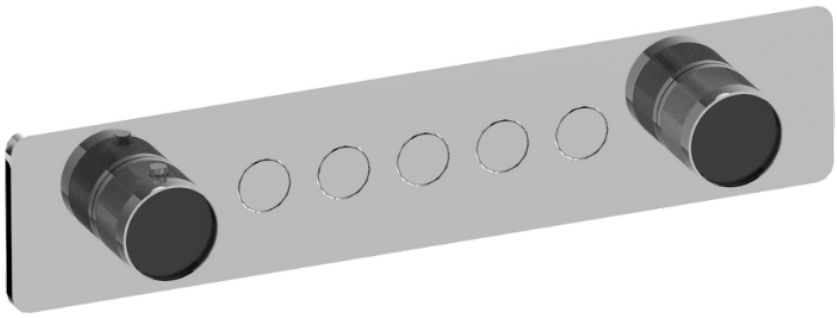

Available Finishes

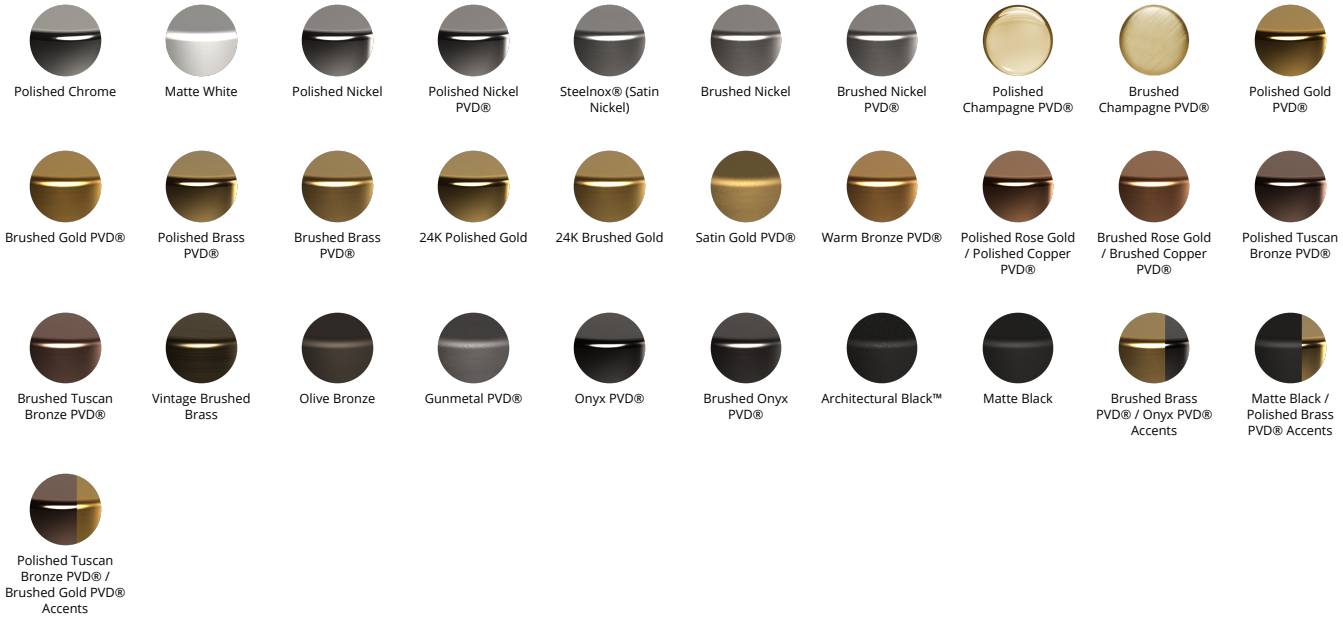
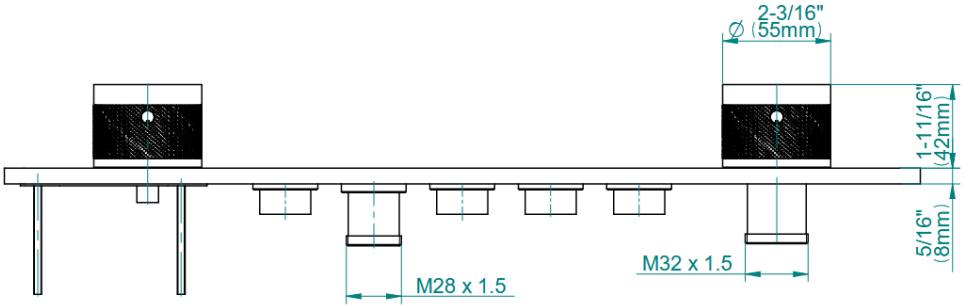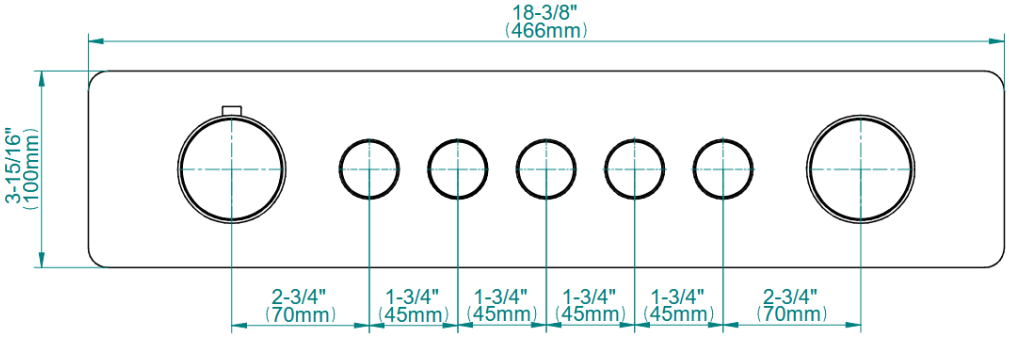
RIVA Collection
G-18025HAD-T
RIVA Contemporary 5-button split knob diamond knurl horizontal trim