G-9955
Push-Top Umbrella Pop-Up Drain with Overflow

Product Features

- Fits 1-3/4" Drain Opening
- With 1-1/4" Tailpiece
- May be used for vessel sinks with overflow holes

Available Finishes
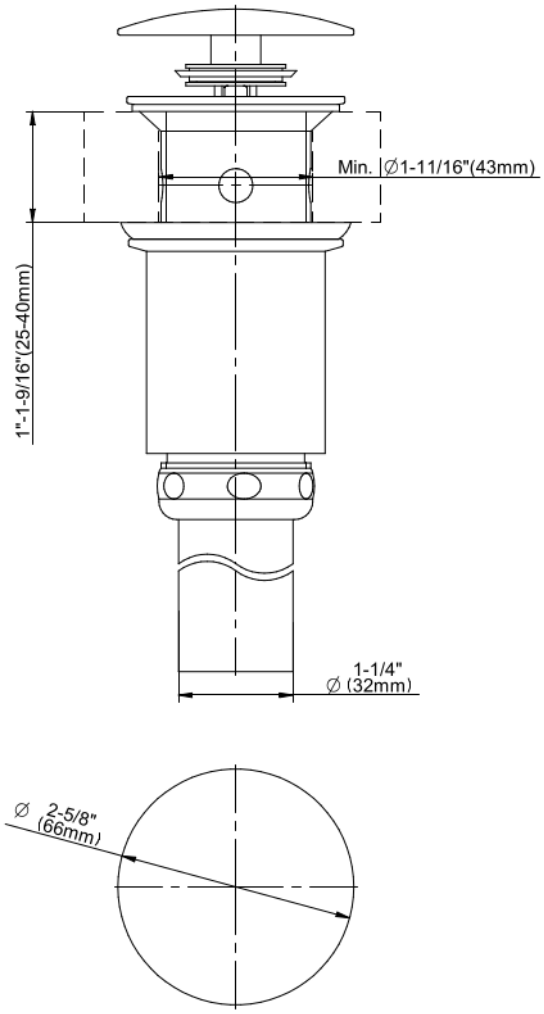
G-9955
Push-Top Umbrella Pop-Up Drain with Overflow