RIVA Collection
G-18024HAD-T
RIVA Contemporary 4-button split knob diamond knurl horizontal trim

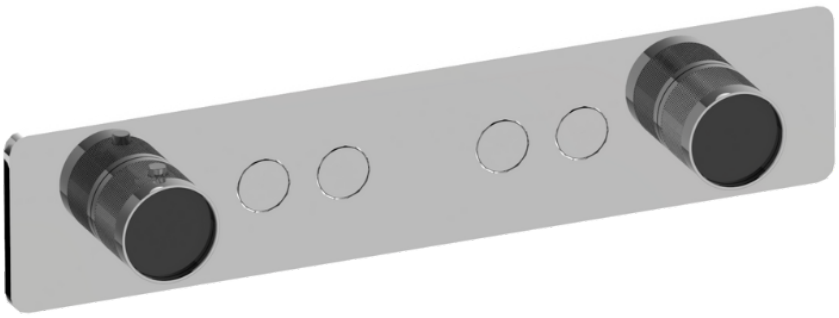

Available Finishes

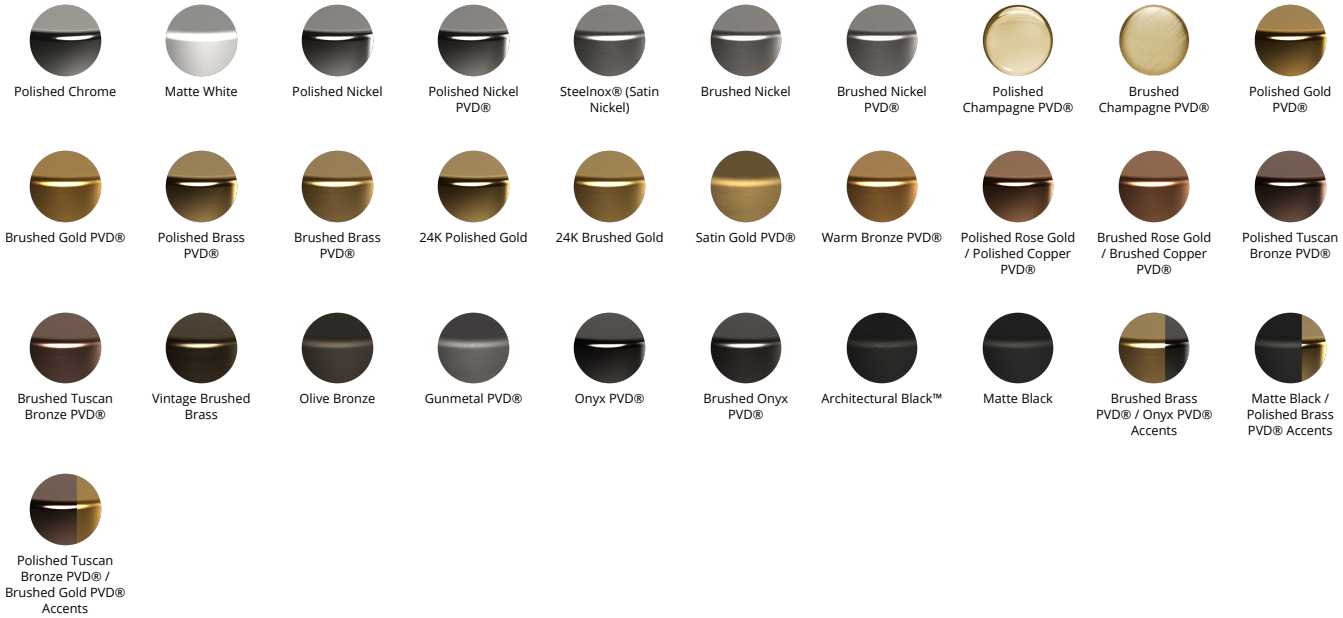
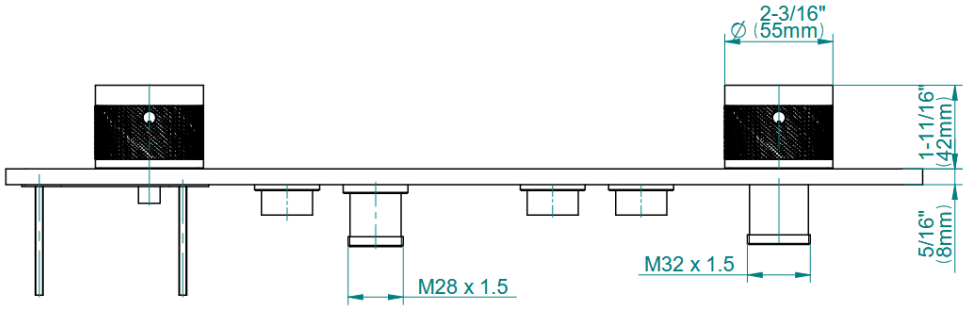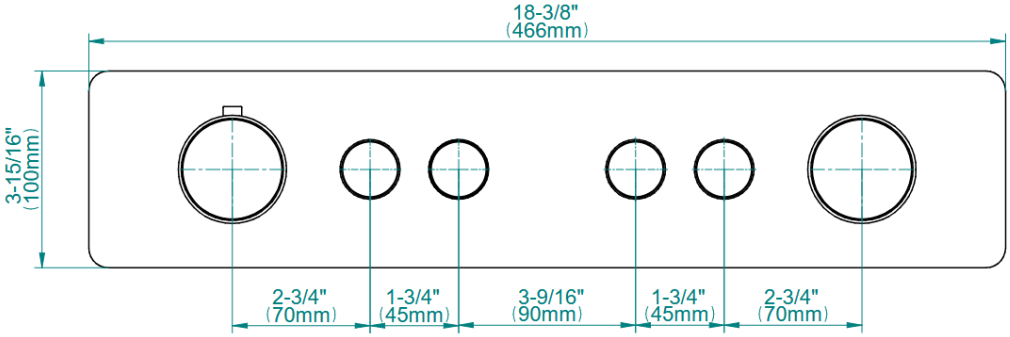
RIVA Collection
G-18024HAD-T
RIVA Contemporary 4-button split knob diamond knurl horizontal trim