RIVA Collection
G-18014HBD-T
RIVA Traditional 4-button paired knob diamond knurl horizontal trim

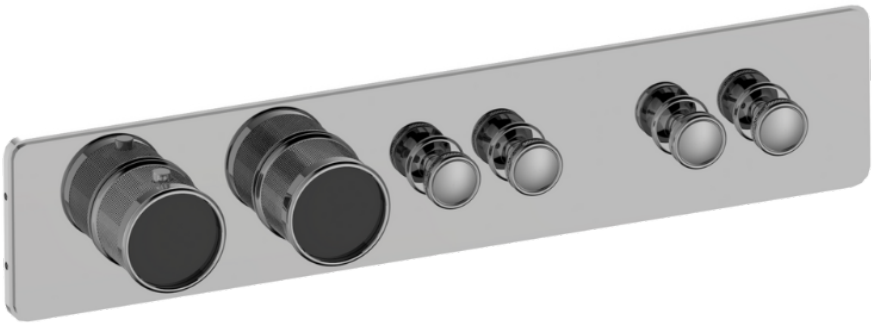

Available Finishes

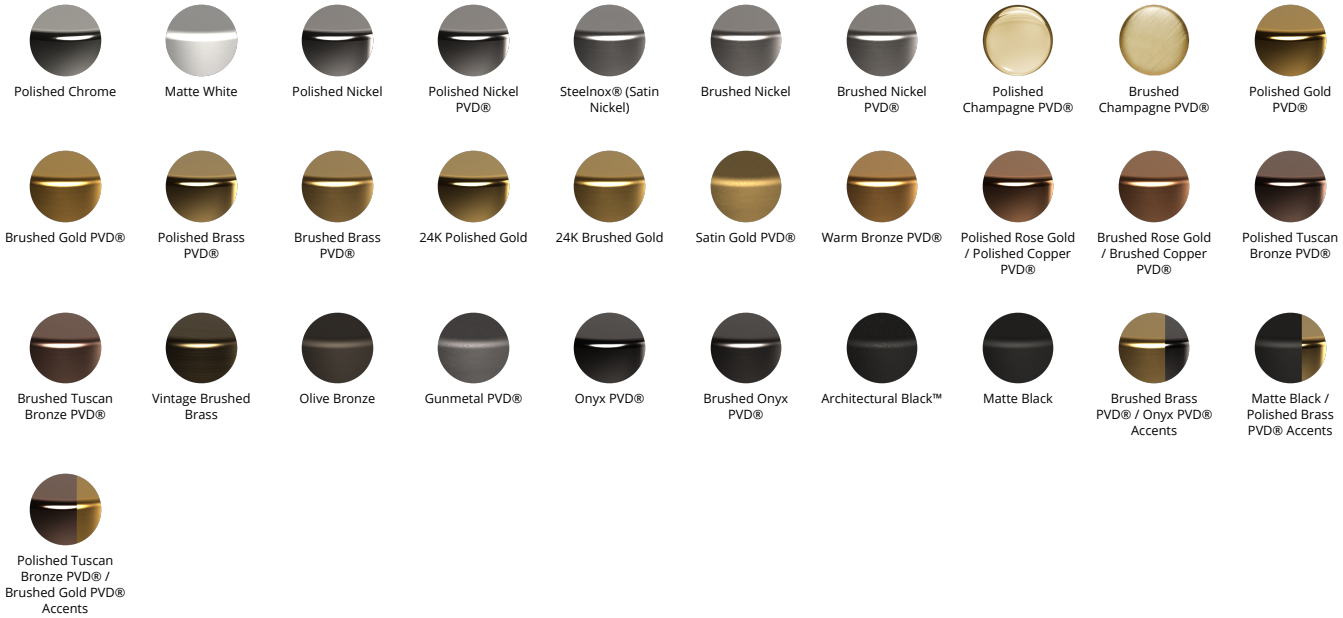
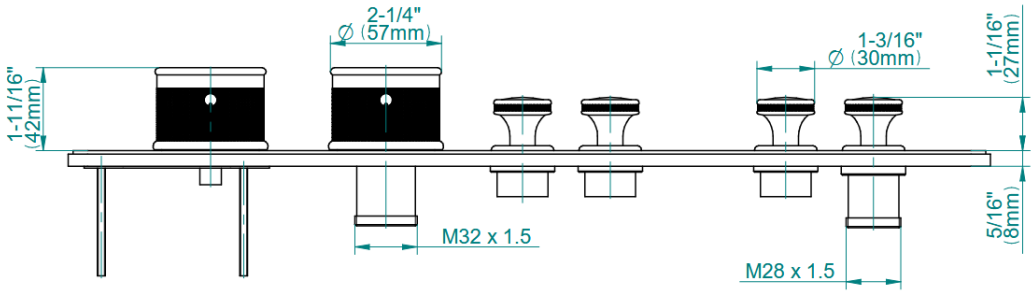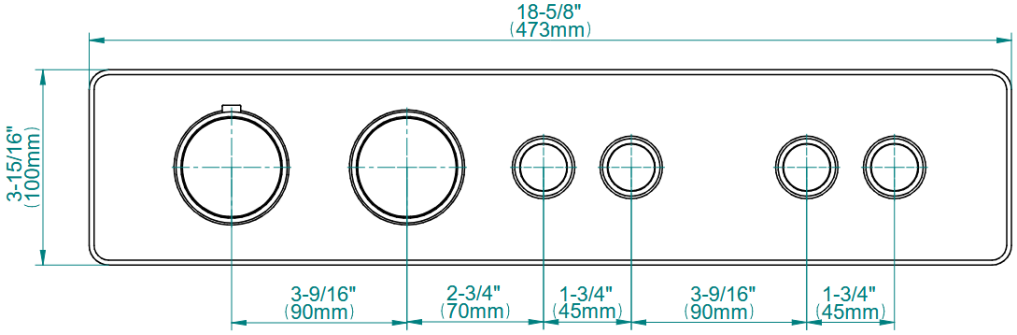
RIVA Collection
G-18014HBD-T
RIVA Traditional 4-button paired knob diamond knurl horizontal trim