RIVA Collection
G-18013HBP-T
RIVA Traditional 3-button paired knob horizontal trim

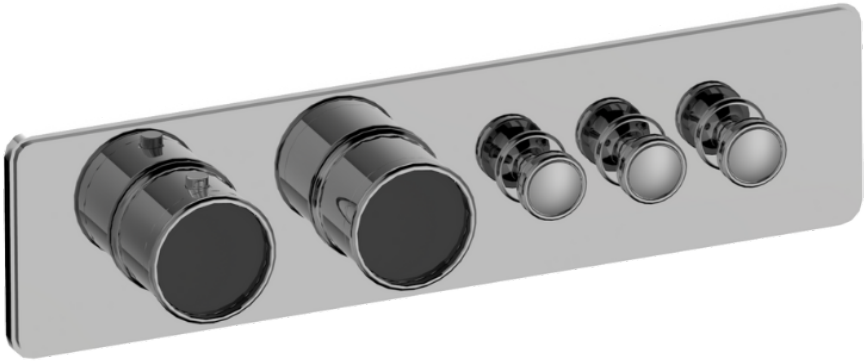

Available Finishes

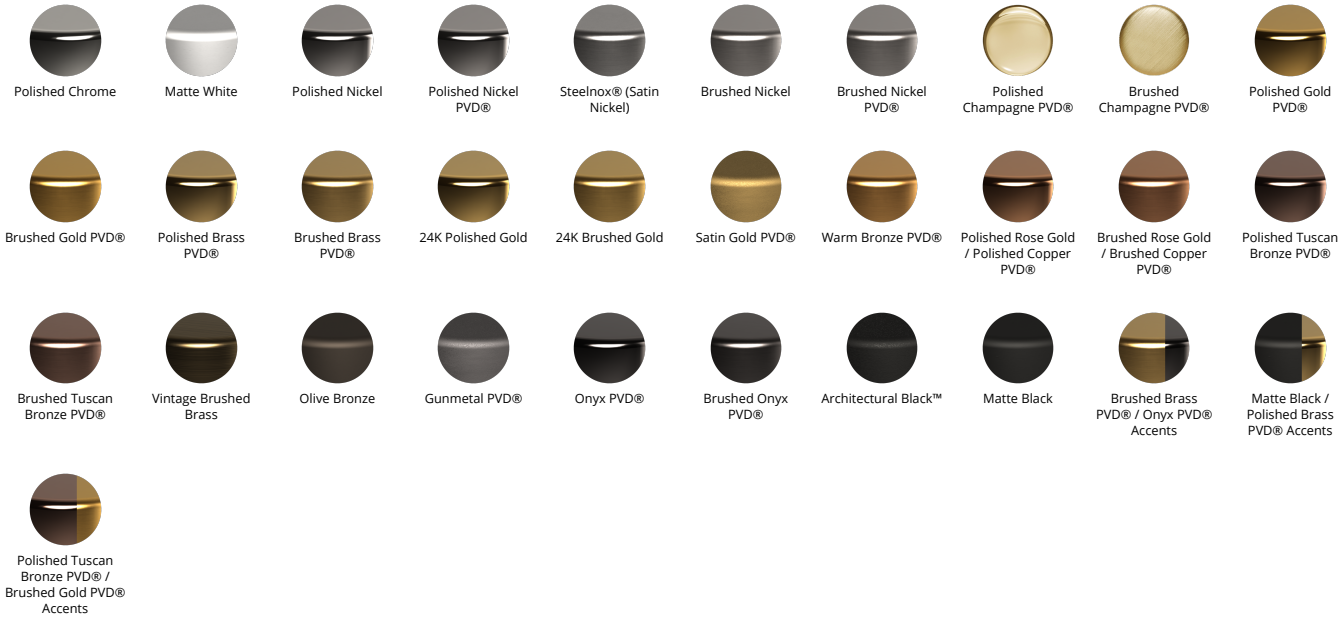
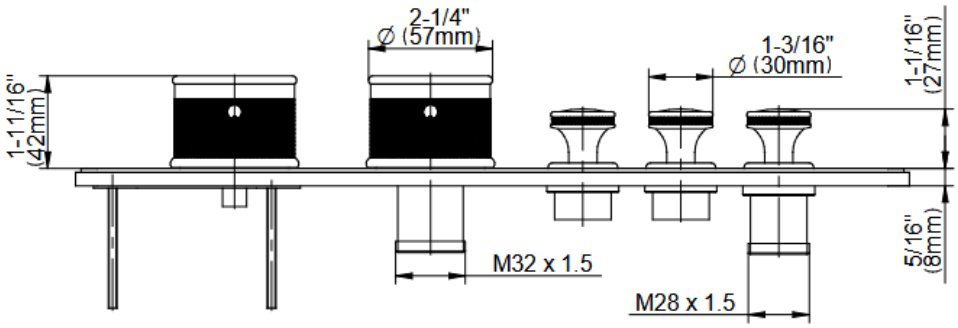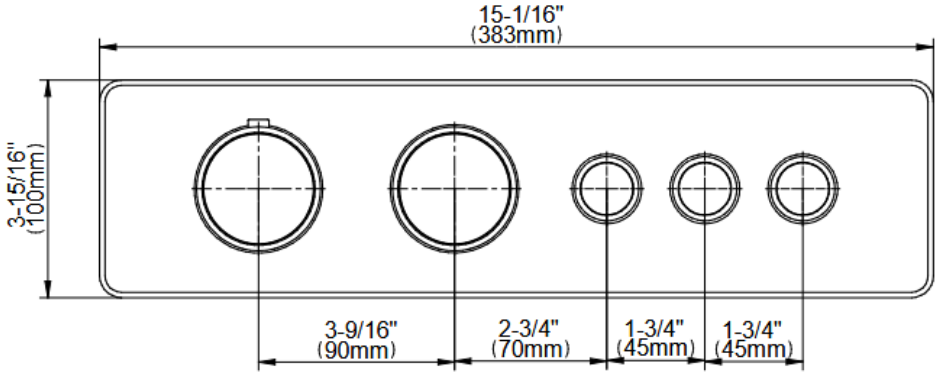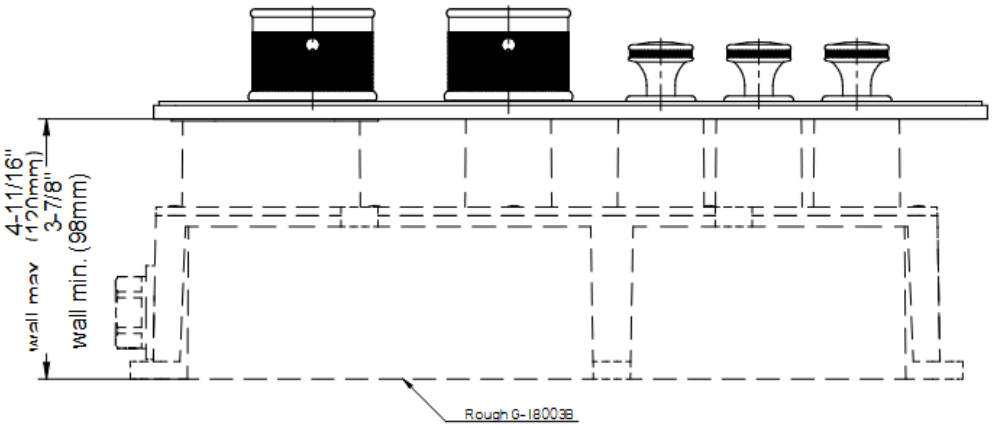
RIVA Collection
G-18013HBP-T
RIVA Traditional 3-button paired knob horizontal trim