RIVA Collection
G-18012HBP-T
RIVA Traditional 2-button paired knob horizontal trim

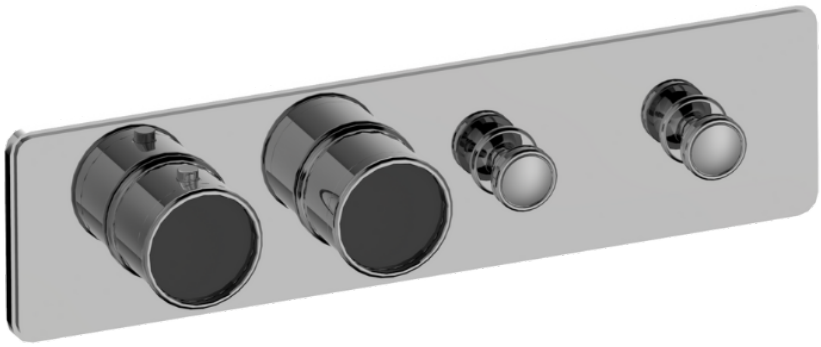

Available Finishes

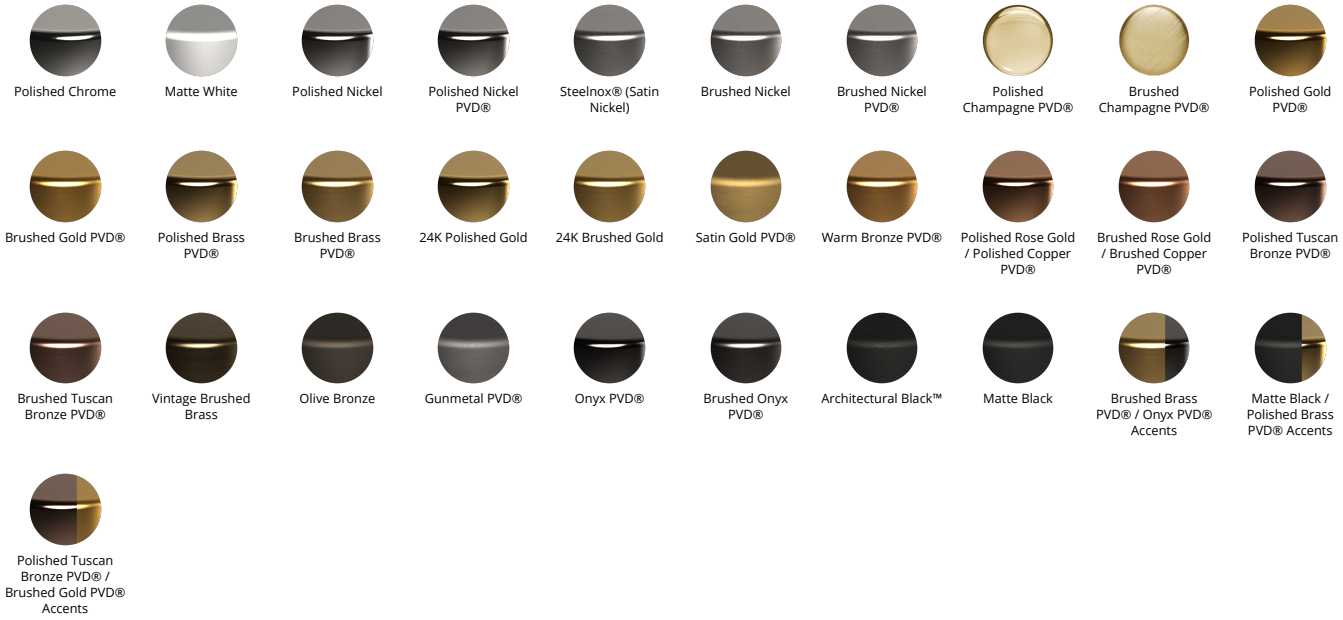
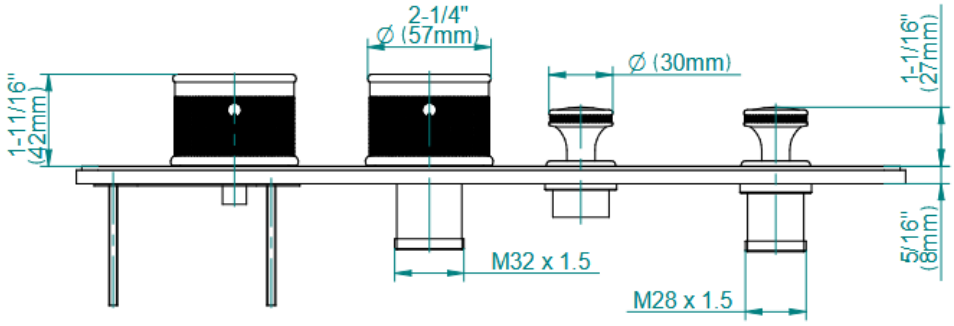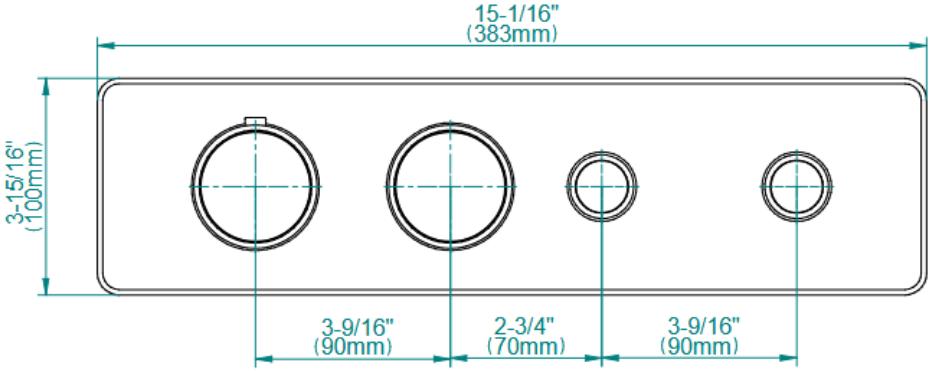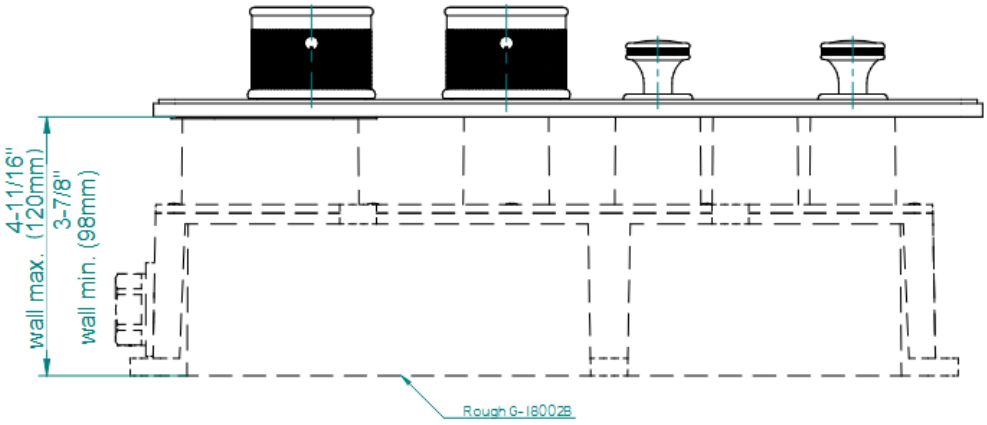
RIVA Collection
G-18012HBP-T
RIVA Traditional 2-button paired knob horizontal trim