RIVA Collection
G-8706TP
RIVA Traditional handshower with slide bar set

Available Finishes

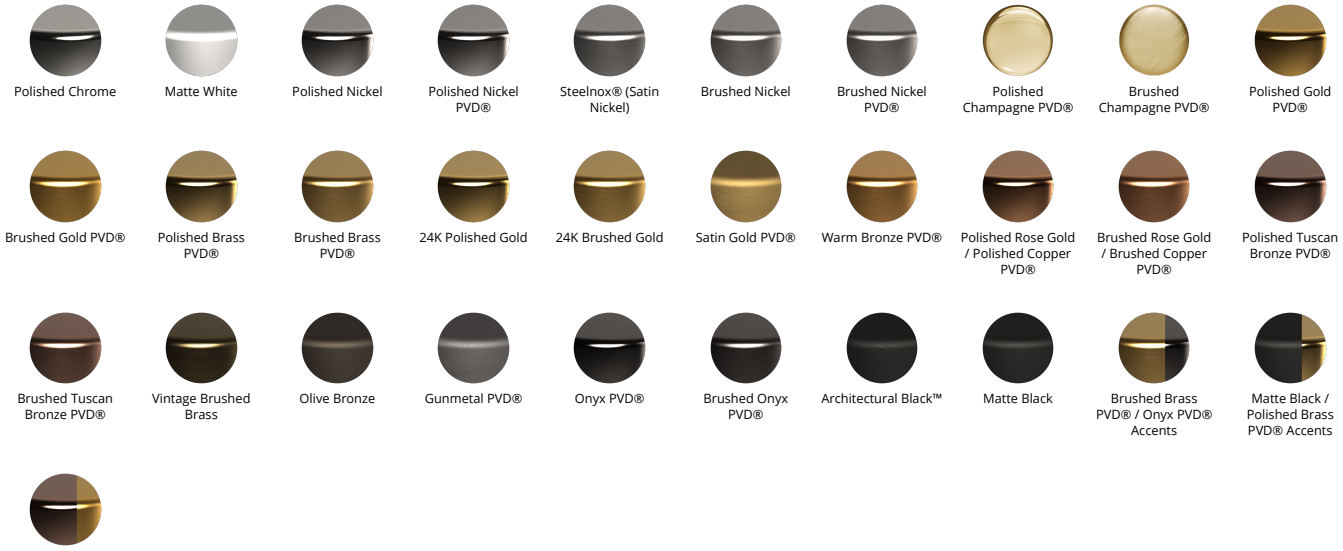
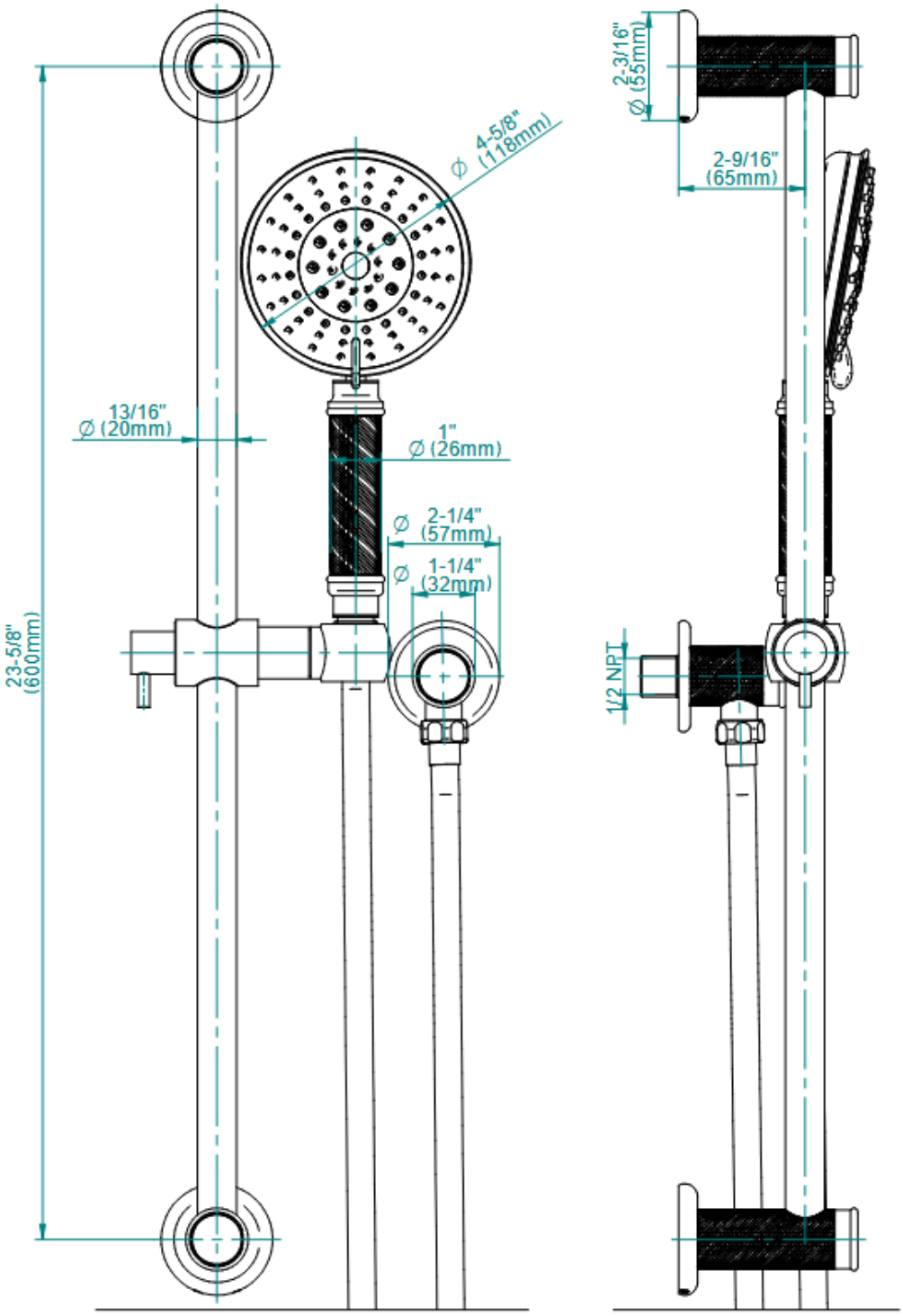
RIVA Collection
G-8706TP
RIVA Traditional handshower with slide bar set