RIVA Collection
G-8706TD
RIVA Traditional handshower with slide bar set diamond knurled

Available Finishes

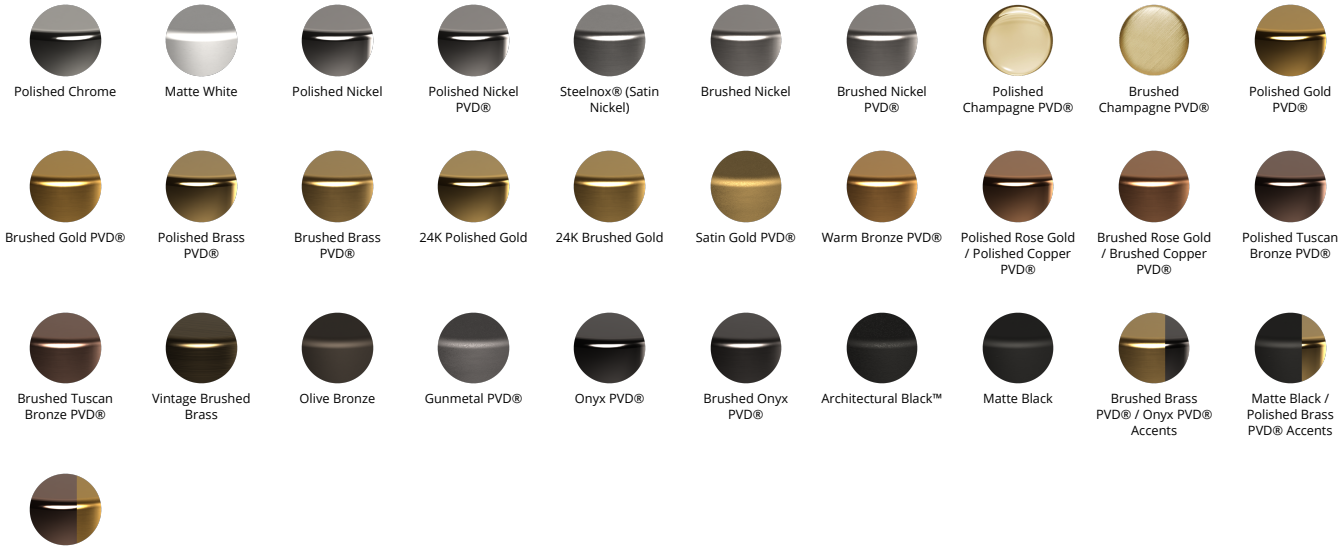
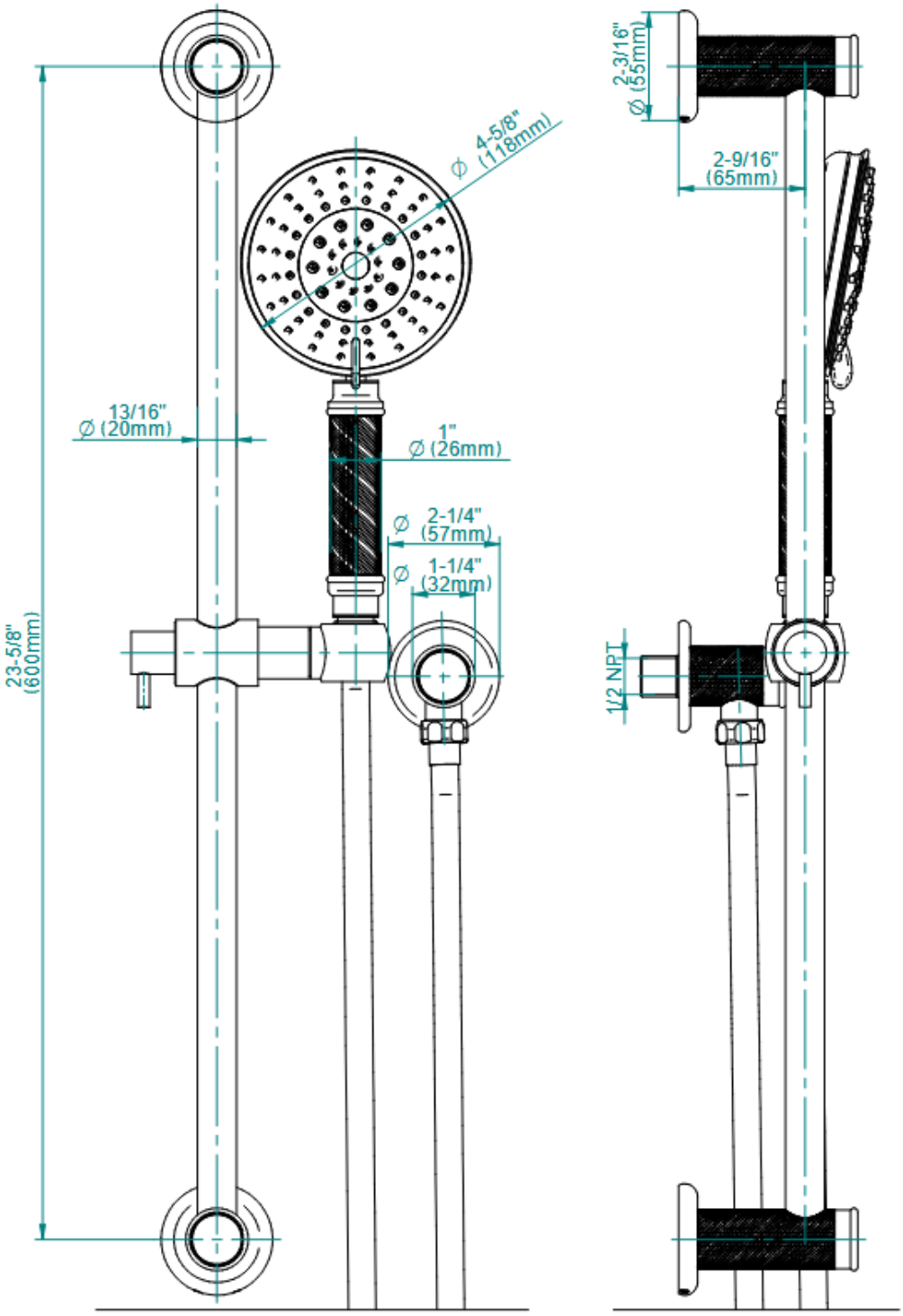
RIVA Collection
G-8706TD
RIVA Traditional handshower with slide bar set diamond knurled