RIVA Collection
G-8618CF
RIVA Contemporary wall bracket and integrated wall supply elbow fluted knurled

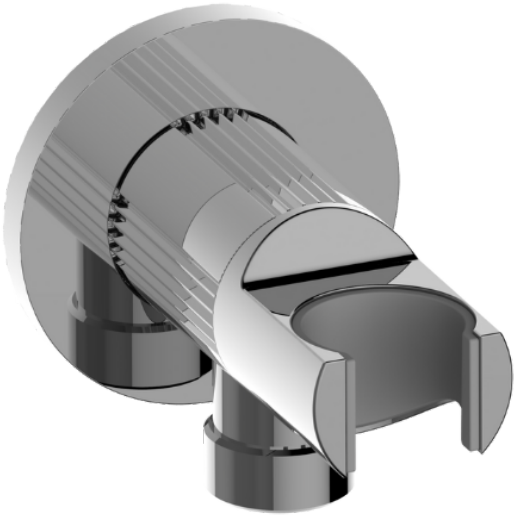

Available Finishes

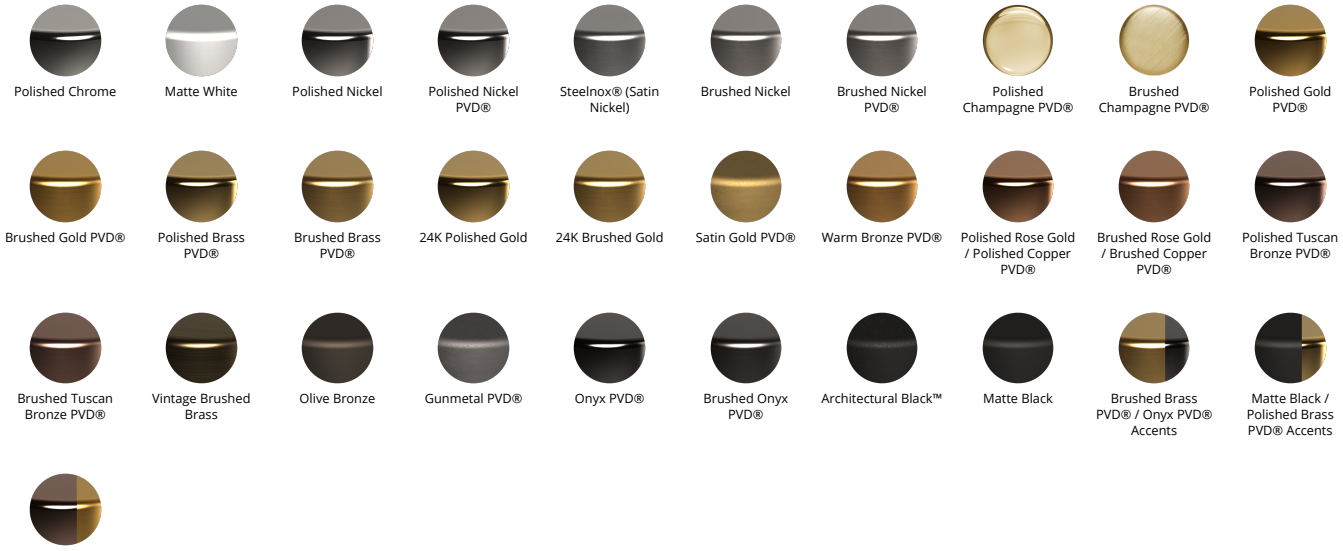
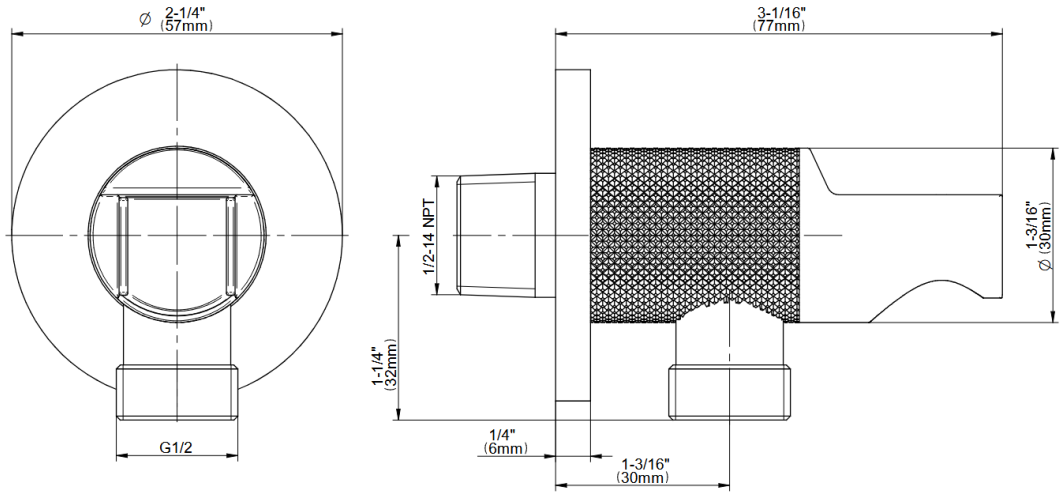
RIVA Collection
G-8618CF
RIVA Contemporary wall bracket and integrated wall supply elbow fluted knurled