G-9152
Tissue Holder

GRAFF®

Code compliance

- ADA
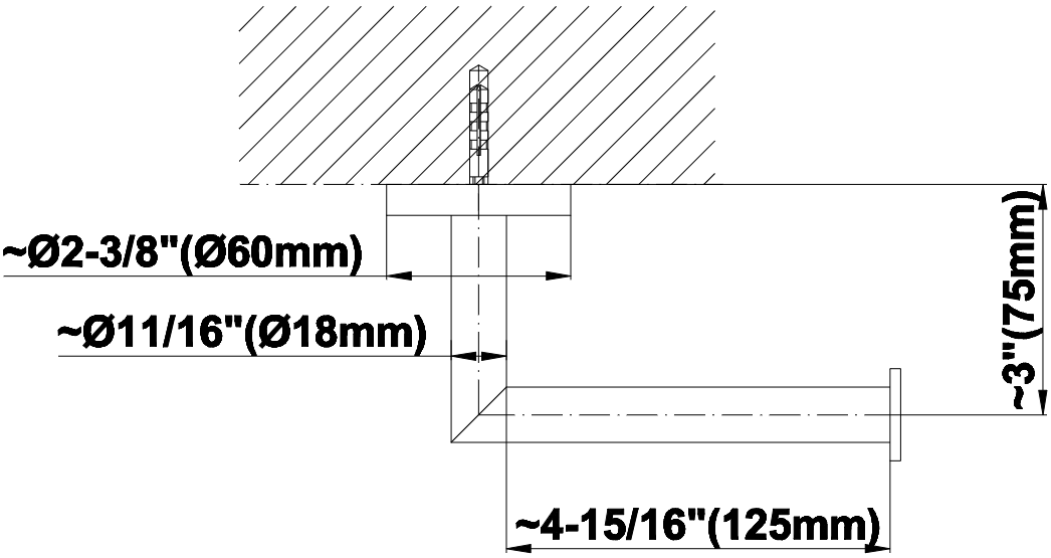
Available Finishes