M.E. Collection
G-9138
Tissue Holder

Code compliance

- ADA

Available Finishes

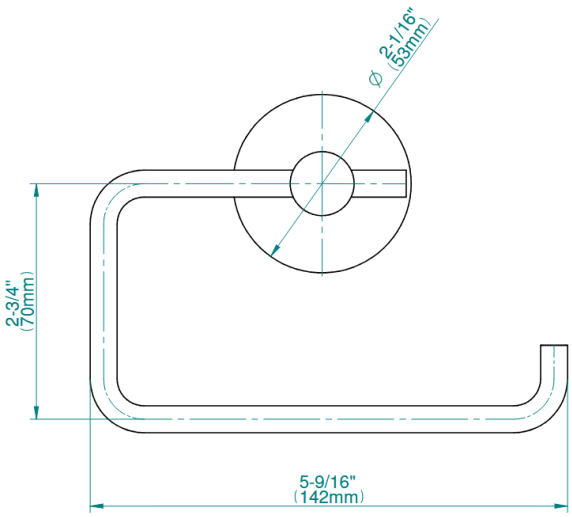

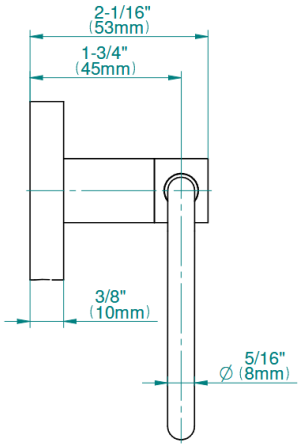

The measurements shown are for reference only. Products and specifications shown are subject to change without notice. Revised 09/2023