M.E. Collection
G-9137
M.E. Towel Ring

Available Finishes

M.E. Collection
G-9137
M.E. Towel Ring
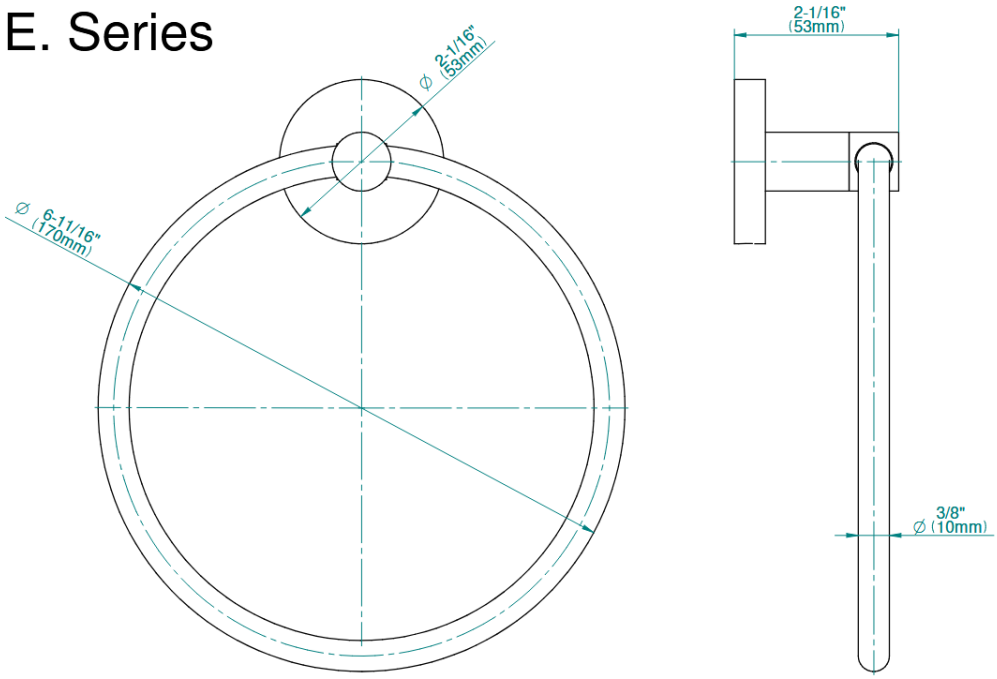
M.E. Series