G-9105
Tissue Holder

Code compliance

- ADA

Available Finishes
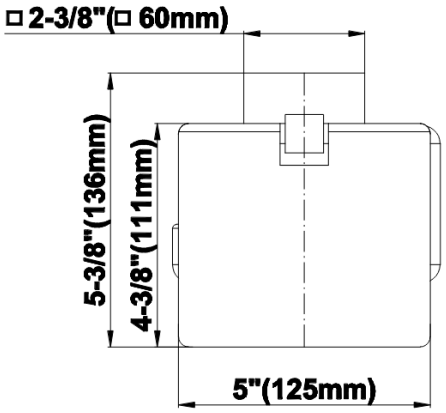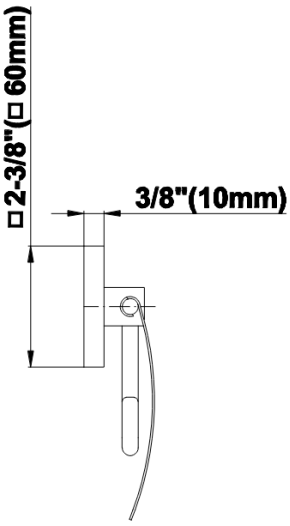
G-9105
Tissue Holder