G-9007
Towel Ring

Available Finishes
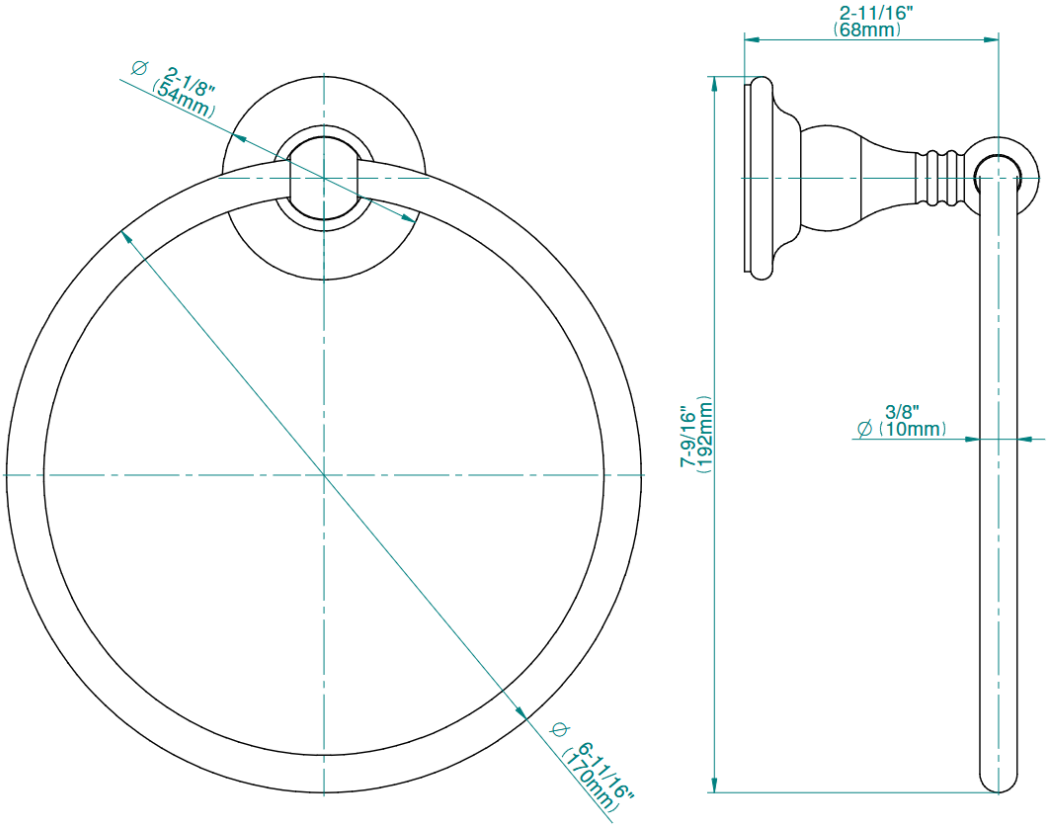
G-9007
Towel Ring