G-8654
Contemporary Rectangle Handshower

Product Features

- Smooth, all-metal handle
- Shower hose not included
- Handshower flow rate ?1.5 max gpm
- Includes internal backflow preventer

Code compliance

- CALGreen

Available Finishes
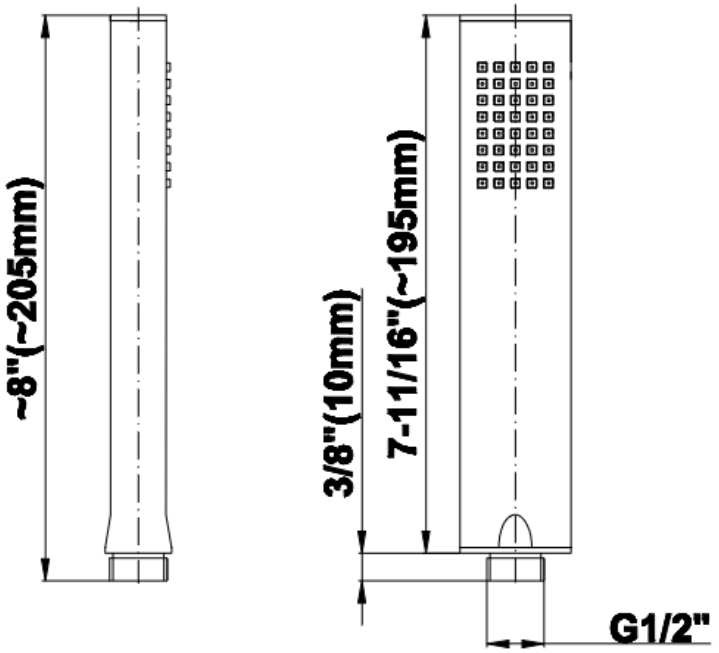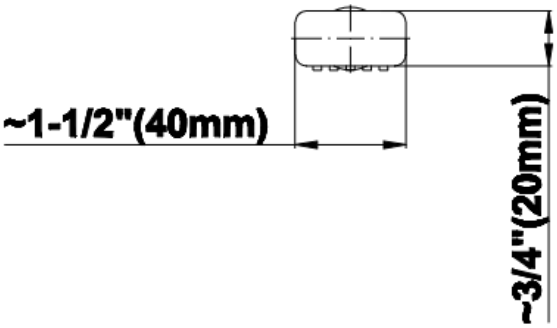
G-8654
Contemporary Rectangle Handshower