G-8642
Contemporary Round Wall Bracket for Handshower

Product Features

- Solid brass construction
- Swivel holder

Available Finishes
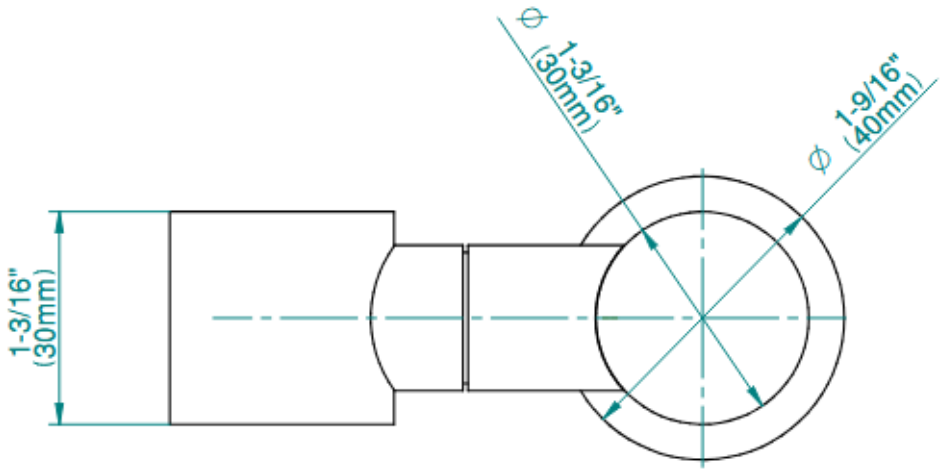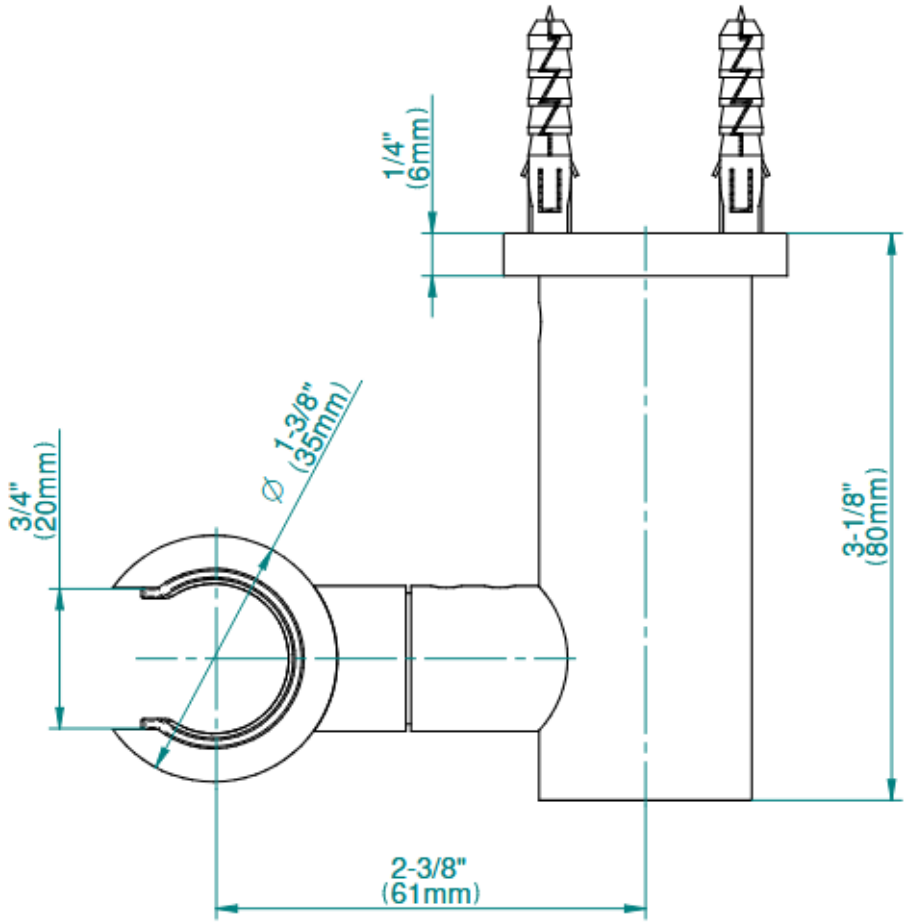
G-8642
Contemporary Round Wall Bracket for Handshower