G-8029-RK1-T
Cameo M-Series 3-Way Diverter Valve Trim with Handle

Product Features

- Single metal handle
- Decorative trim plate
- To complete package, you must order G-8053 3-way diverter control valve with off function (no pass-through)
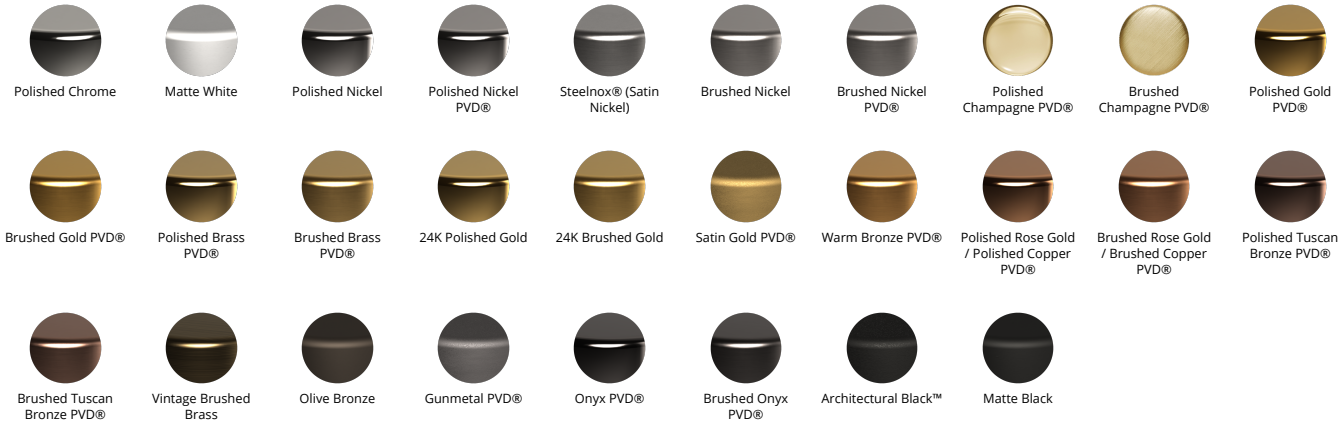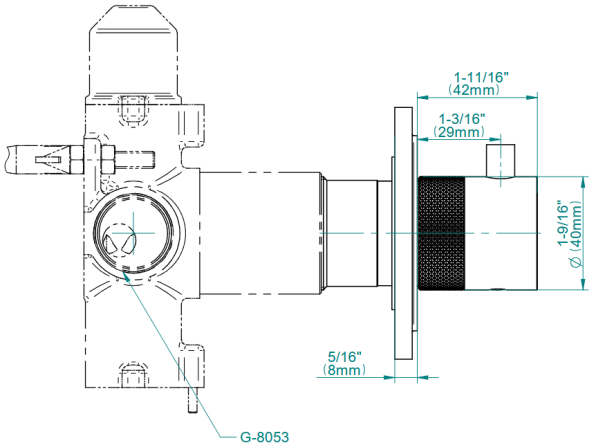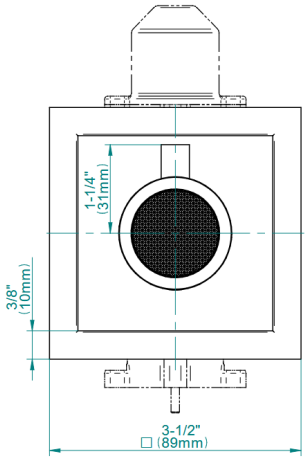
Available Finishes