G-8031-LM60E-T
Vignola M-Series Thermostatic Valve Trim with Handle

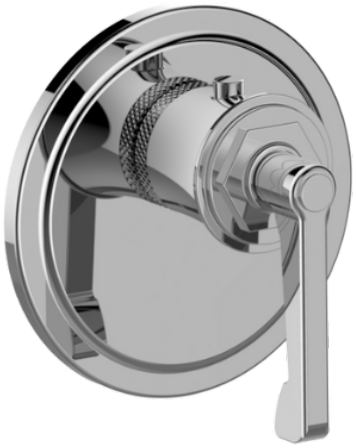

Product Features

- Single metal handle
- Decorative trim plate
- To complete package, you must order G-8006 thermostatic rough valve

Code compliance

- ADA

Available Finishes

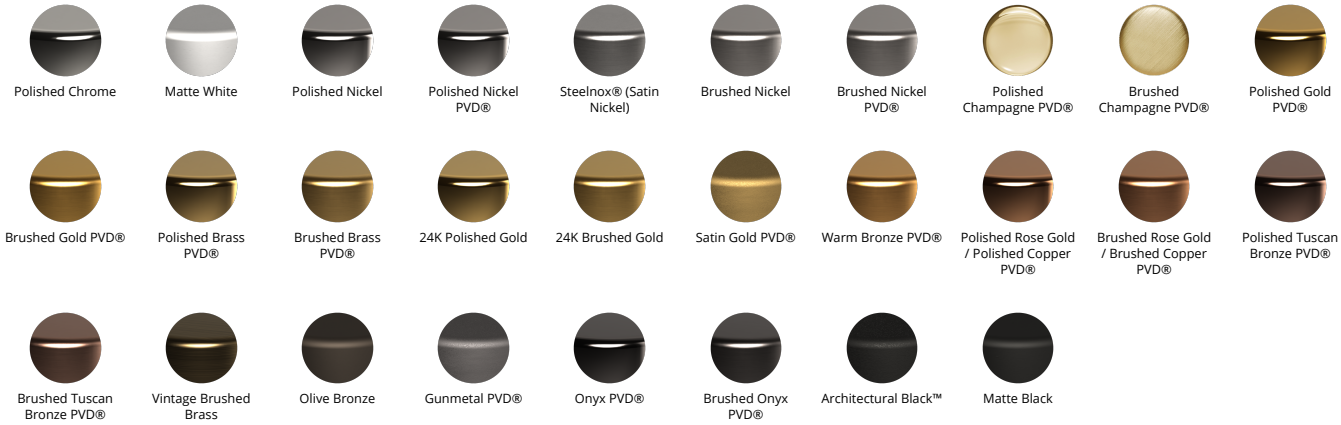
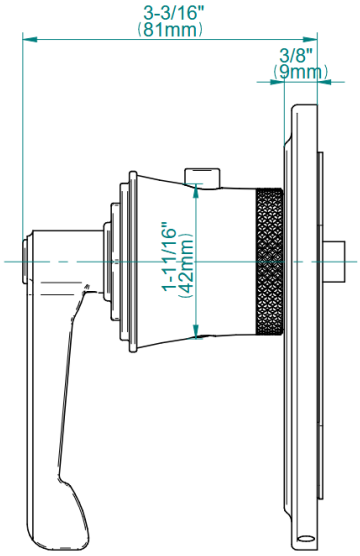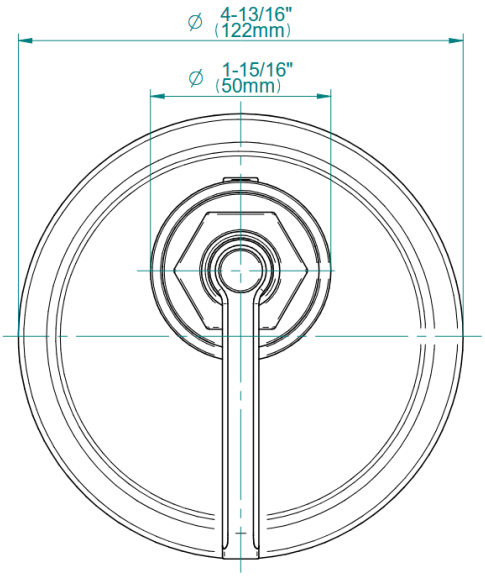
G-8031-LM60E-T
Vignola M-Series Thermostatic Valve Trim with Handle