Finezza Collection
G-8379
Finezza Transitional Showerhead with Ceiling Arm

Product Features

- 9” low-profile rain showerhead
- 6
- 126 no-clog, easy-clean rubber spray nozzles
- Showerhead flow rate ? 1.8 max gpm

Available Finishes

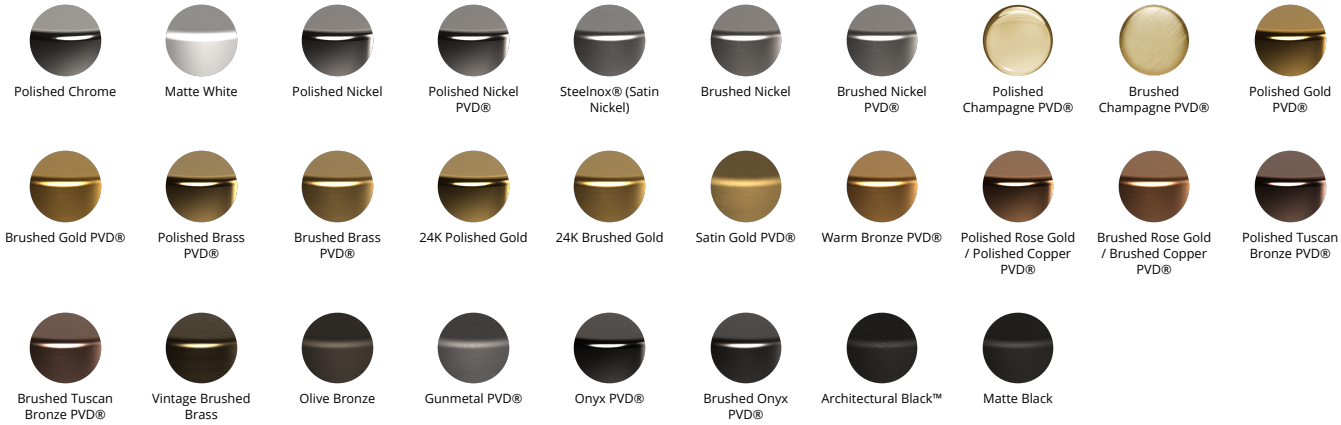
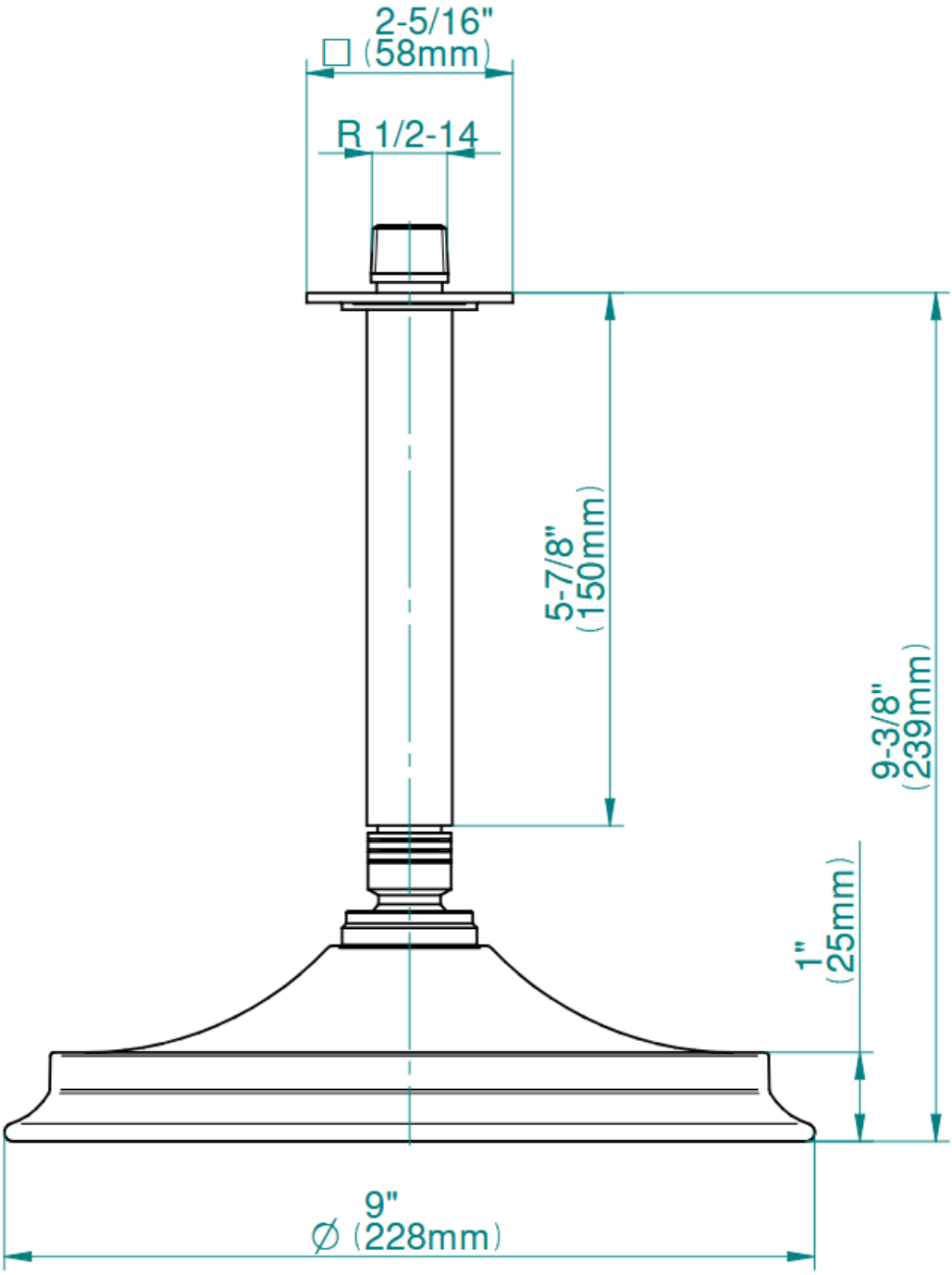
Finezza Collection
G-8379
Finezza Transitional Showerhead with Ceiling Arm