Finezza Collection
G-8372
Transitional Showerhead with Arm

Product Features

- 9” low-profile rain showerhead
- 18” shower arm and flange
- 126 no-clog, easy-clean rubber spray nozzles
- Showerhead flow rate ? 1.8 max gpm

Code compliance

- CALGreen

Available Finishes

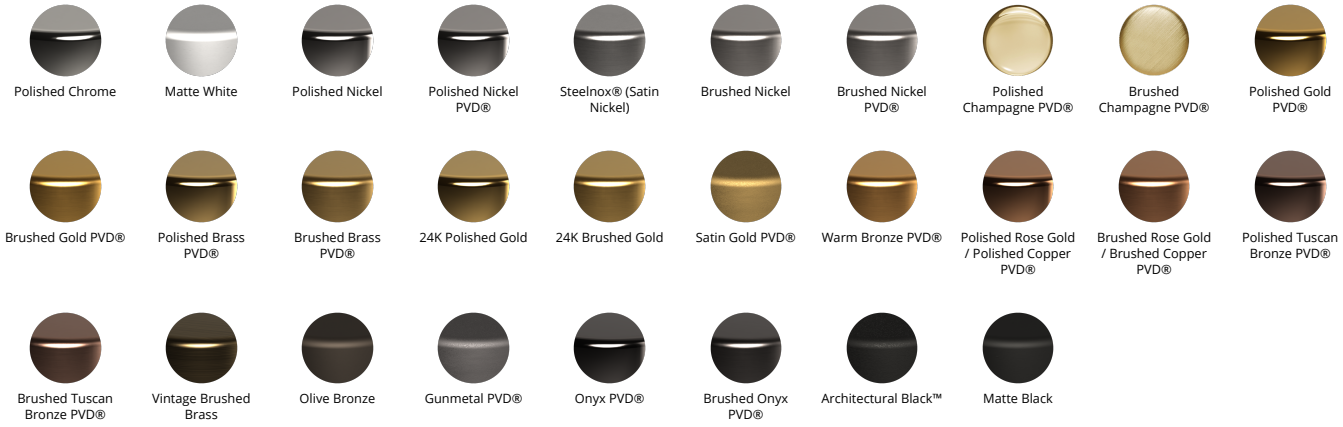

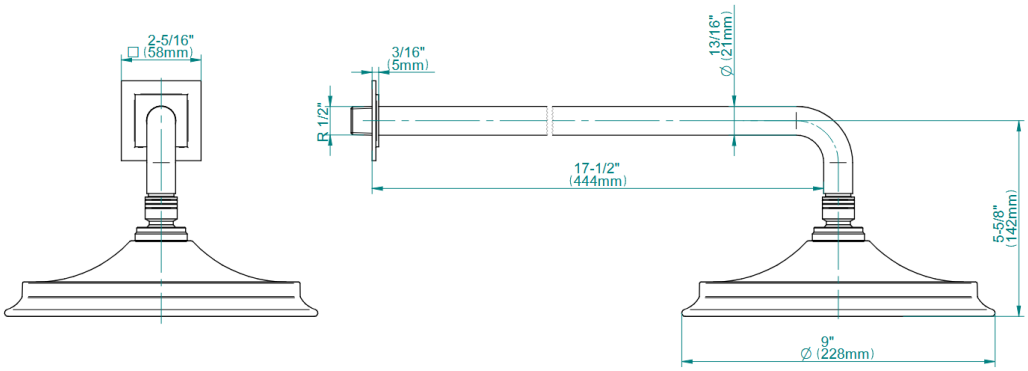

The measurements shown are for reference only. Products and specifications shown are subject to change without notice. Revised 09/2023
www.graff-designs.com | phone: 800-954-4723