G-8540
12" Ceiling Shower Arm

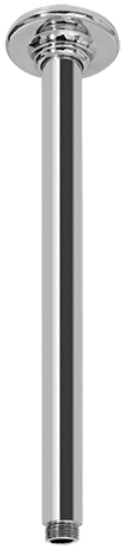

Product Features

- Includes arm and round flange
- 1/2
- For use with all showerheads

Available Finishes

G-8540
12" Ceiling Shower Arm

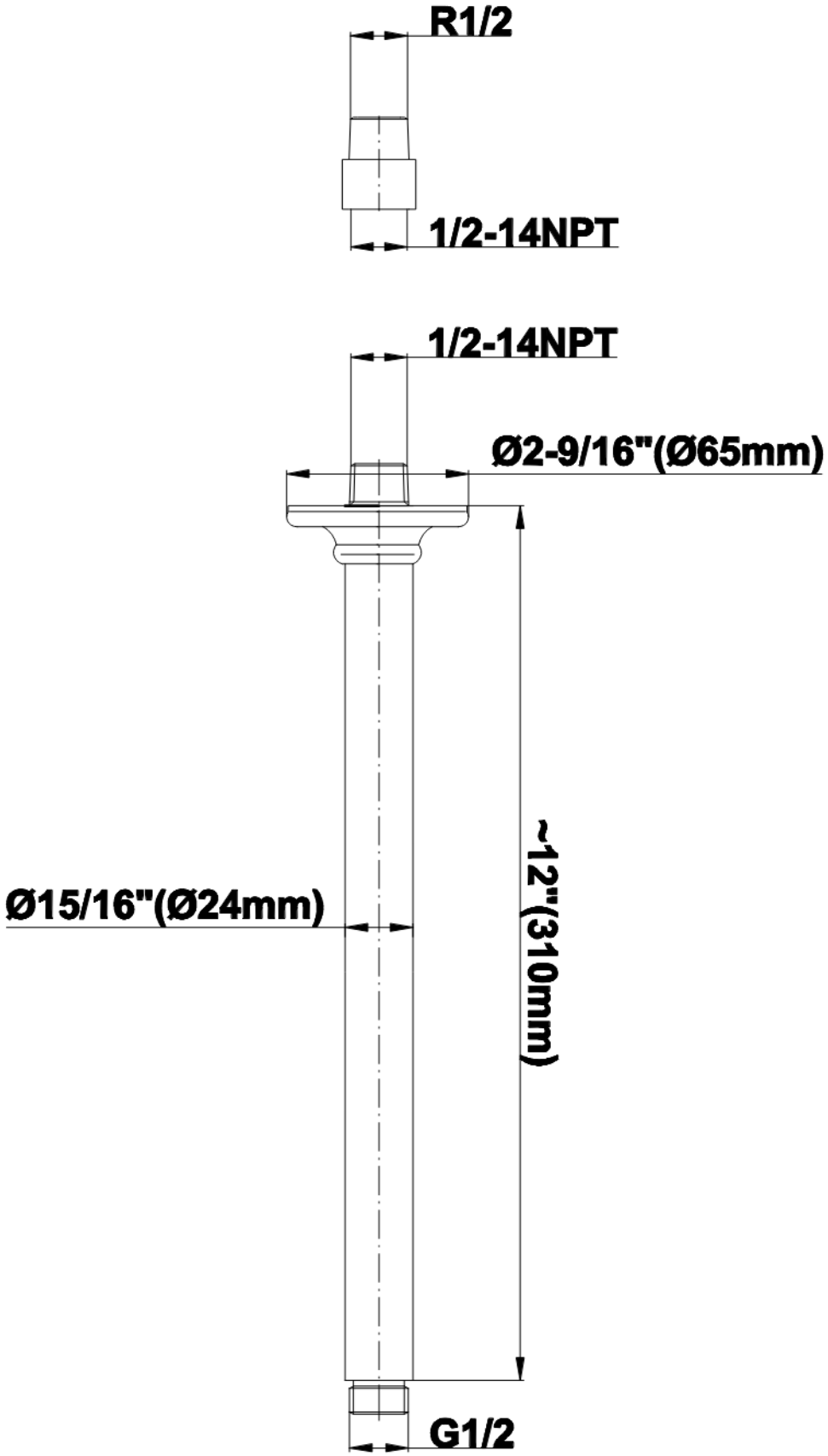

The measurements shown are for reference only. Products and specifications shown are subject to change without notice. Revised 09/2023
www.graff-designs.com | phone: 800-954-4723