G-8752
Wall Bracket for Handshower

Product Features

- Solid Brass Construction
- Swivel holder

Available Finishes
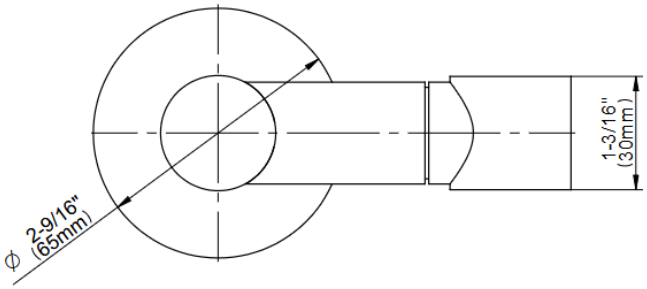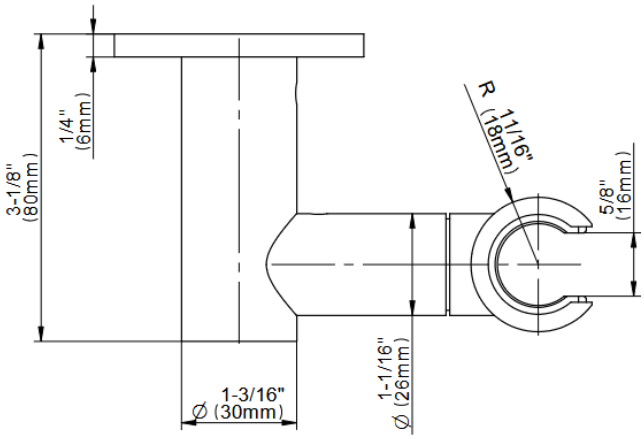
G-8752
Wall Bracket for Handshower