Immersion Collection
G-2350-LM40B
Roman Tub (Rough and Trim)

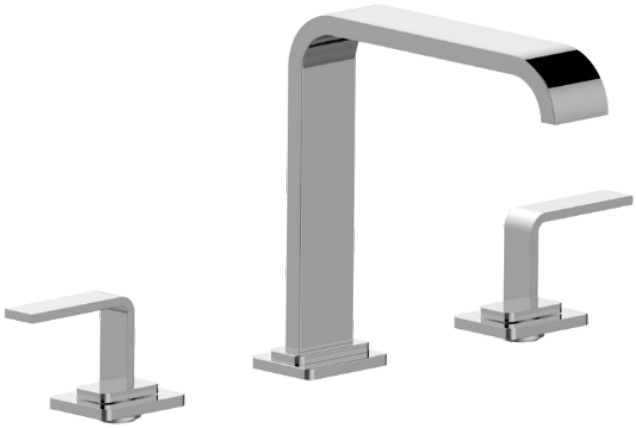

Product Features

- Aerated flow rate 8 gpm @60 psi
- Matching deck-mounted handshower and diverter set available below

Code compliance

- ADA

Available Finishes
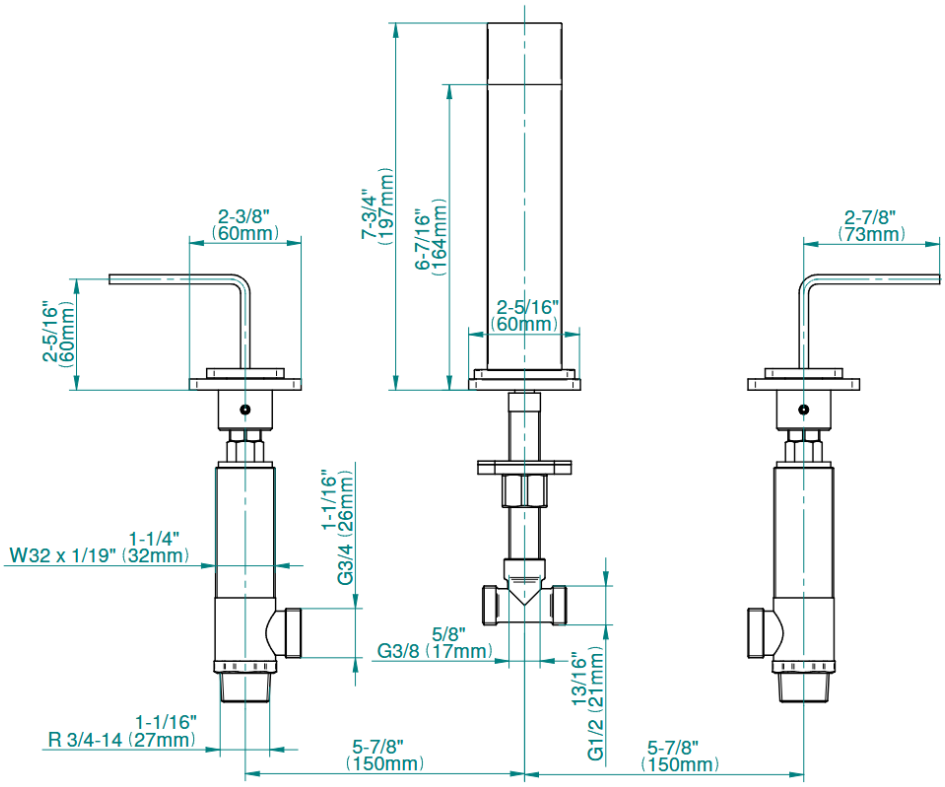
Immersion Collection
G-2350-LM40B
Roman Tub (Rough and Trim)