GL7.690H-LM45E0-T
Wall-Mounted M-Series Thermostatic System - Tub Spout and Handshower (Trim)

Product Features

- Aerated flow rate ~7 gpm @45 psi
- Handshower flow rate ?1.5 max gpm
- 9-1/4" spout reach
- Includes handshower with 59" hose

Code compliance

- ADA
- CALGreen

Available Finishes

GL7.690H-LM45E0-T
Wall-Mounted M-Series Thermostatic System - Tub Spout and Handshower (Trim)

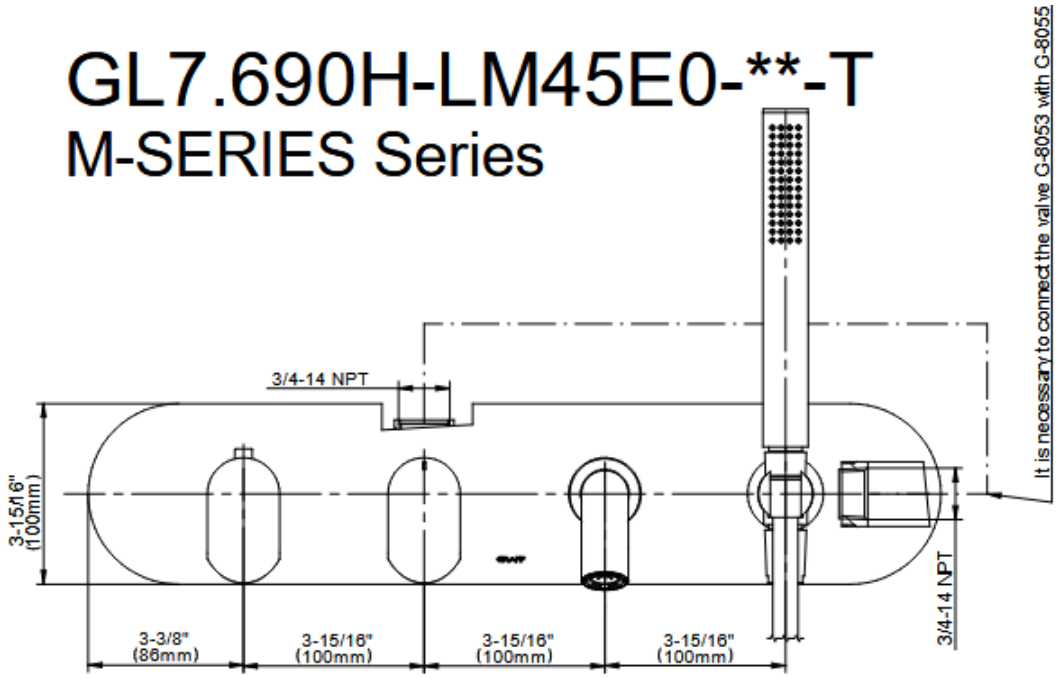

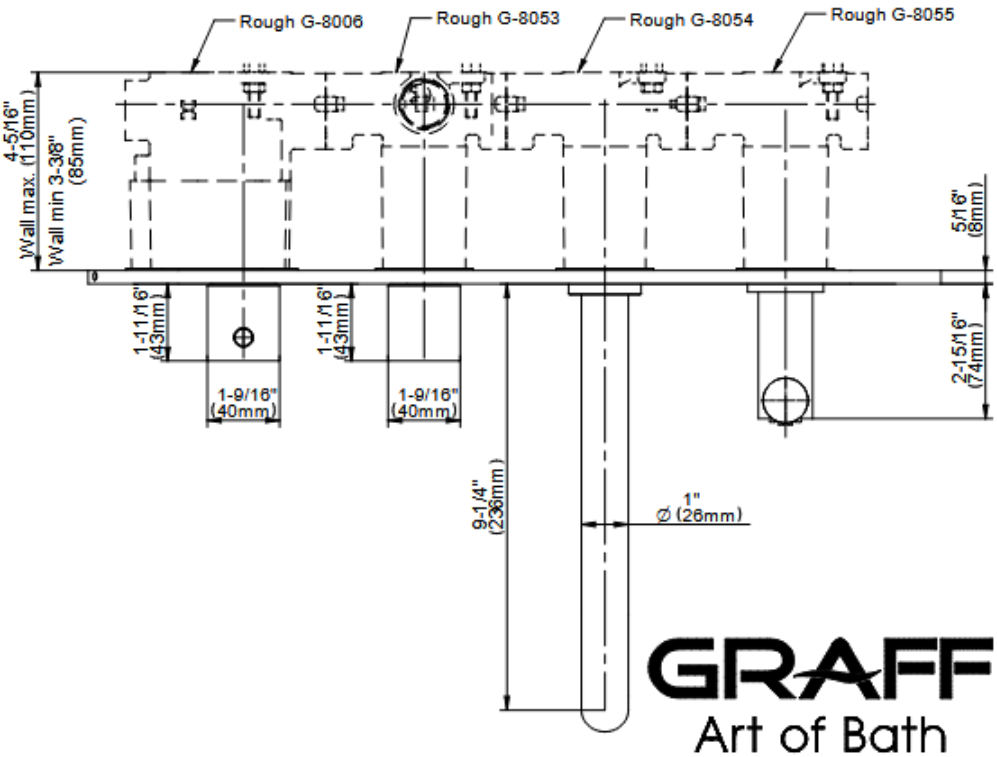

GRAFF
Art of Bath