Terra Collection
G-6750-LM62B-T
Roman Tub (Trim)

Product Features

- Aerated flow rate 13 gpm @60 psi
- Matching deck-mounted handshower and diverter set available
- To complete package, you must order Rough Valve

Code compliance

- ADA
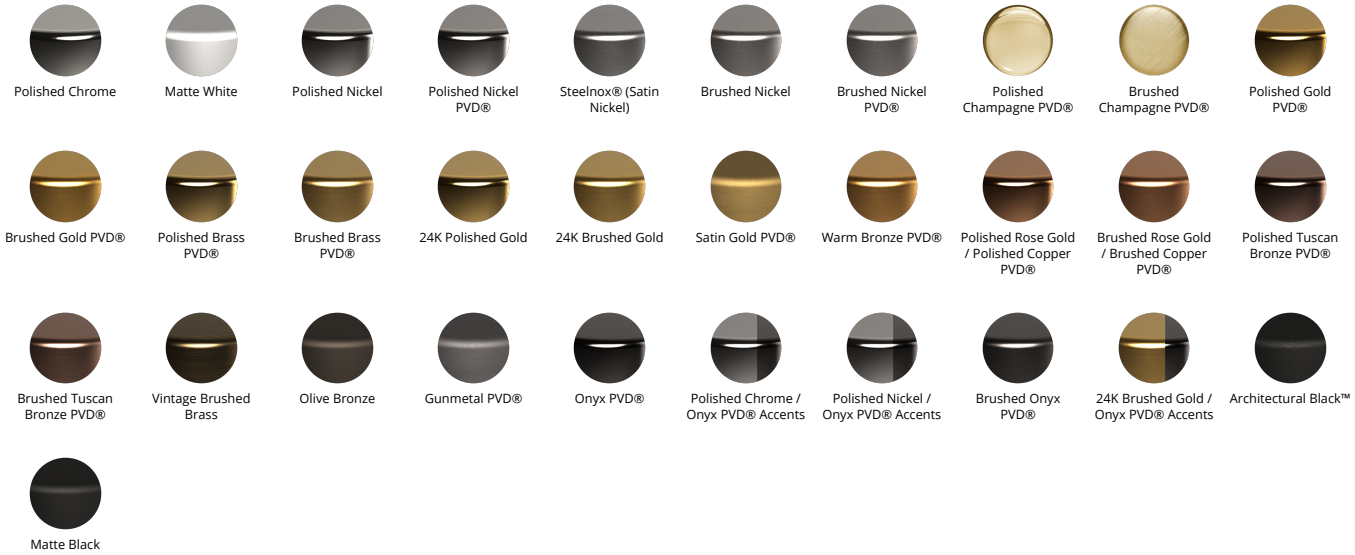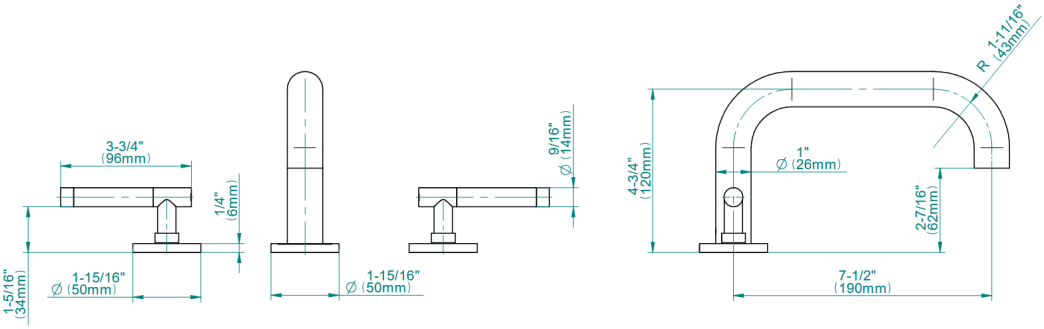
Available Finishes