Terra Collection
G-6710N-LM46B
Widespread Lavatory Faucet

Product Features

- Installs on 8” centers
- Aerated flow rate ?1.2 max gpm
- 1-3/16” hole cutout (x3)
- Includes push-top umbrella pop up drain with overflow
- Optional matching decorative trap G-9970

Available Finishes

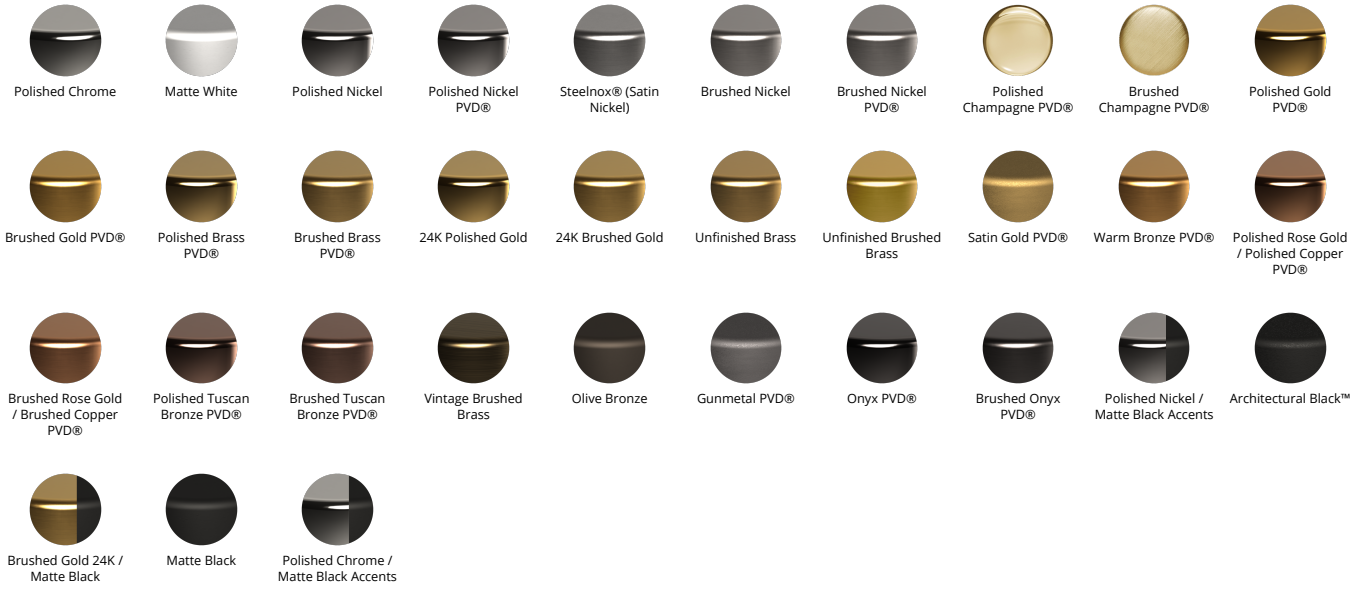
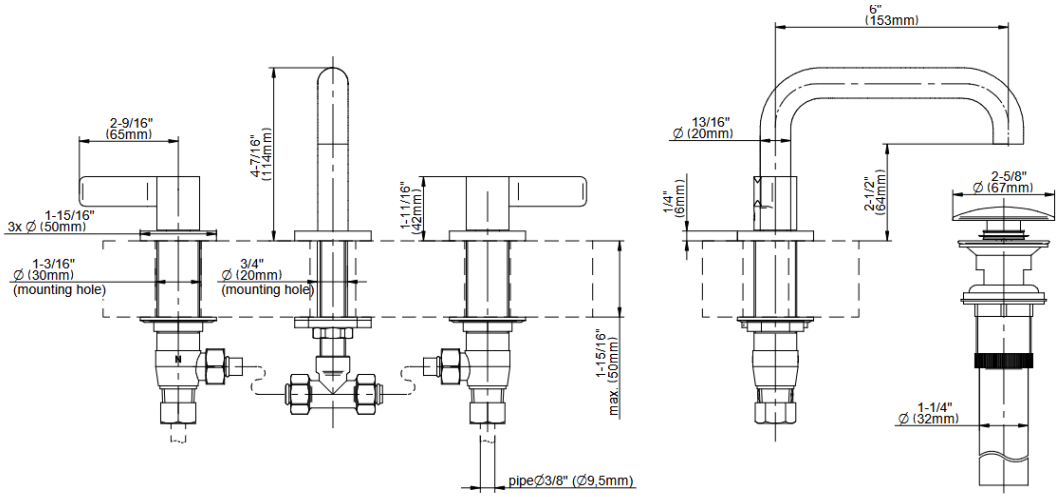
Terra Collection
G-6710N-LM46B
Widespread Lavatory Faucet