M-Series Shower Collection
G-8655
Multifunction Handshower with Wall Bracket and Integrated Wall Supply Elbow

Product Features

- Wall bracket with integrated wall supply elbow
- 59” shower hose
- Includes contemporary handshower - G-8804
- Includes 1/2” NPT female threaded wall supply elbow
- Includes internal backflow preventer
- Handshower flow rate ? 1.5 max gpm

Code compliance

- CALGreen

Available Finishes
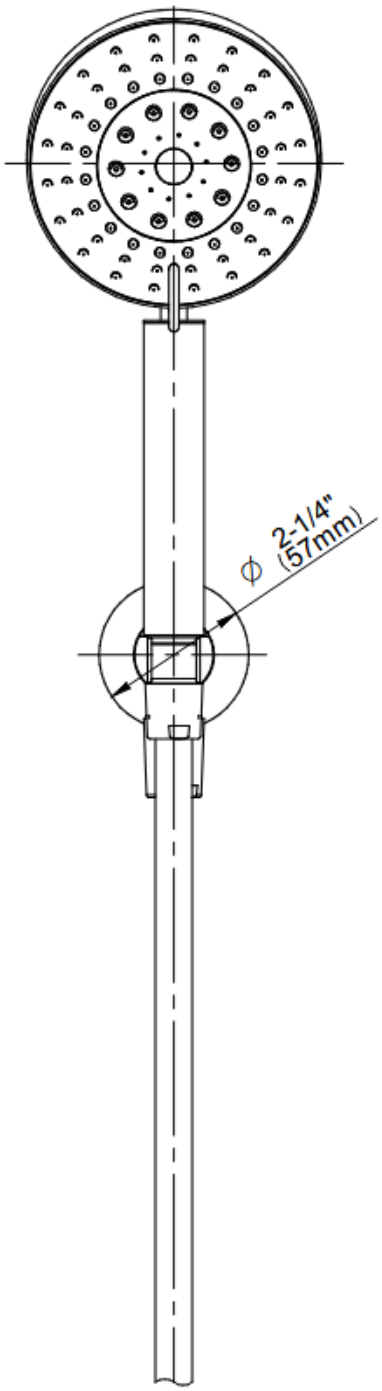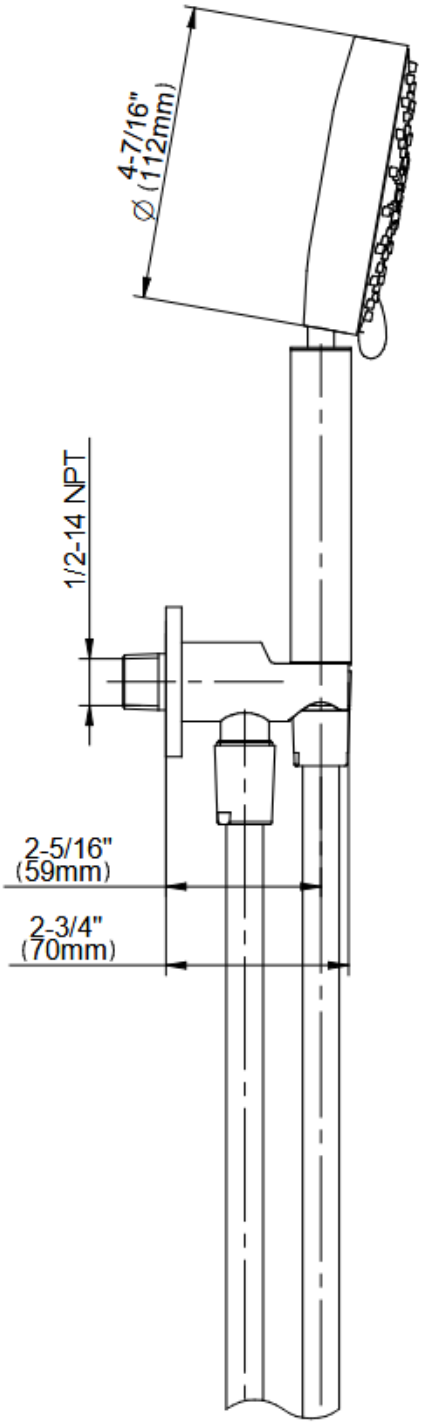
M-Series Shower Collection
G-8655
Multifunction Handshower with Wall Bracket and Integrated Wall Supply Elbow