G-8037-LM61E-T
M-Series Thermostatic Valve Trim with Handle

Product Features

- Single metal handle
- Decorative trim plate
- Use with G-8006 Thermostatic Rough Valve
- To complete package, you must order Rough Valve

Available Finishes

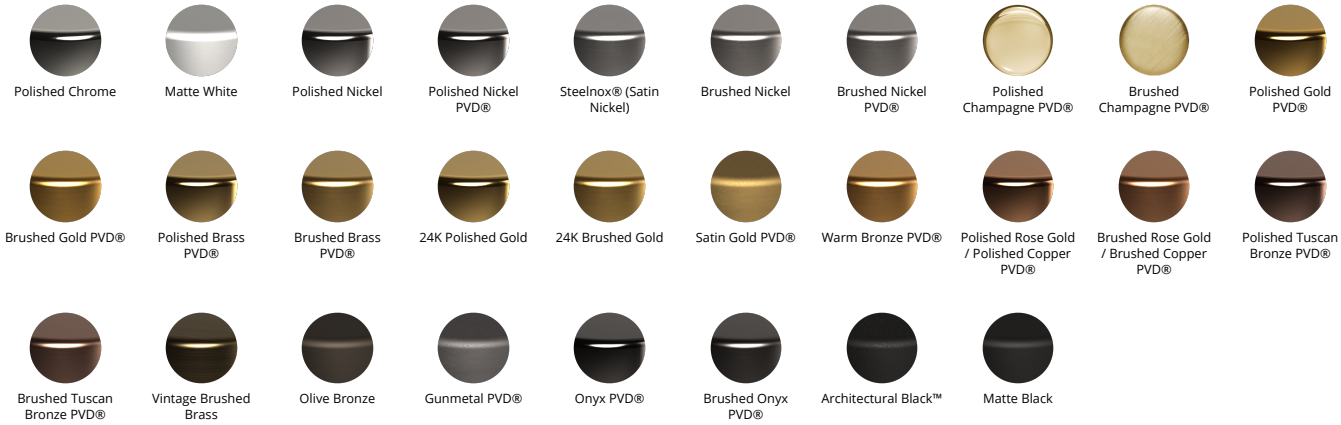

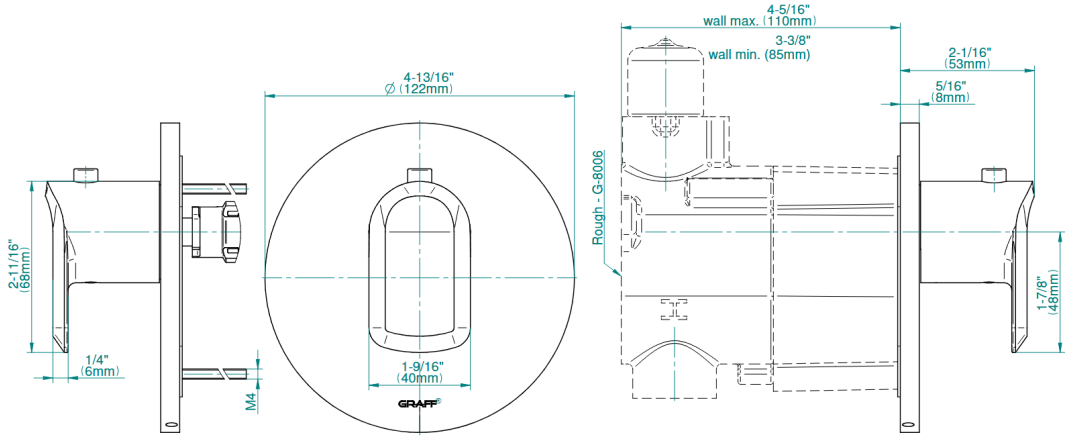

The measurements shown are for reference only. Products and specifications shown are subject to change without notice. Revised 09/2023