Cameo Collection
G-9564A
32” Round Grab Bar with Handshower Holder

Product Features

- 32” wall-mounted grab bar
- Adjustable bracket fits all hoses with conical nut
- Style complements Cameo and MOD+ collections

Code compliance

- ADA

Available Finishes
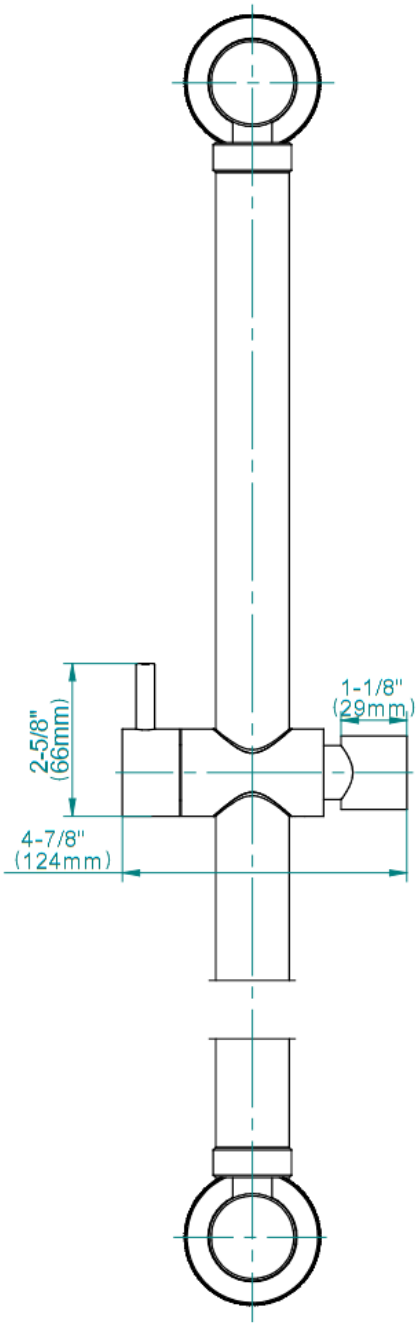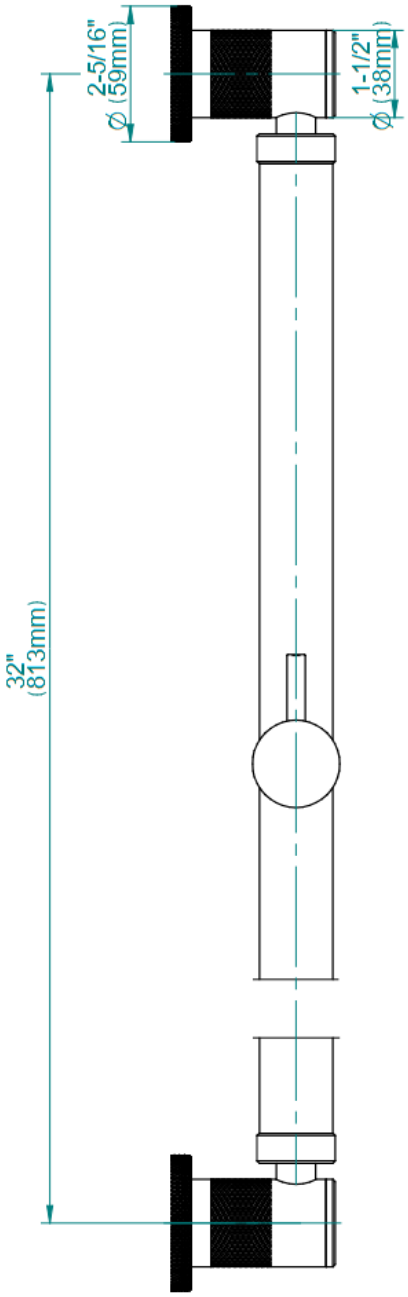
Cameo Collection
G-9564A
32” Round Grab Bar with Handshower Holder