G-09949
Garbage Disposer Deep Flange & Stopper

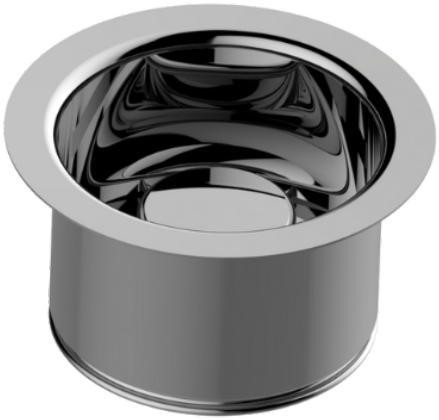

Product Features

- Solid Brass Construction
- Fits 3-1/2" openings
- 2-9/16" Extended Deep Flange
- Fits most Insinkerator, KitchenAid, Emerson, Kenmore, and Grainger models

Available Finishes
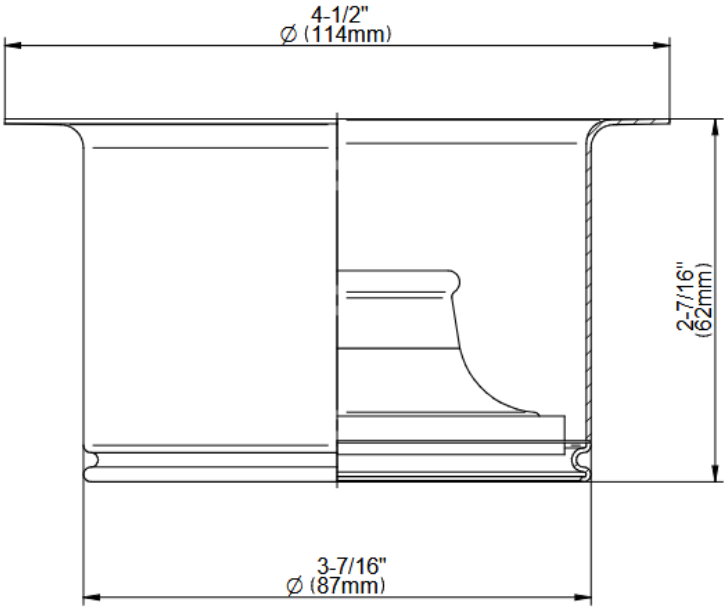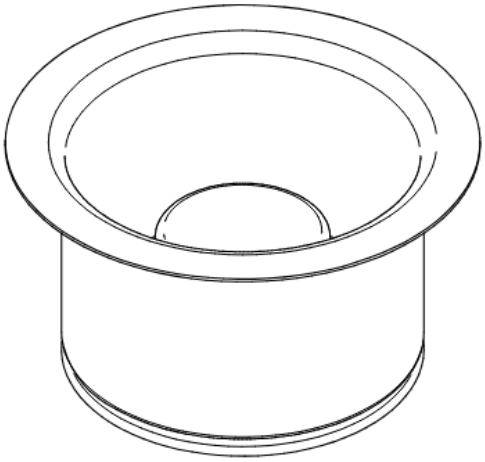
G-09949
Garbage Disposer Deep Flange & Stopper