G-9972
Waste Drain for Kitchen Sink with Plug

Product Features

- Solid Brass Construction
- Includes nuts & washers
- Rubber plug

Available Finishes

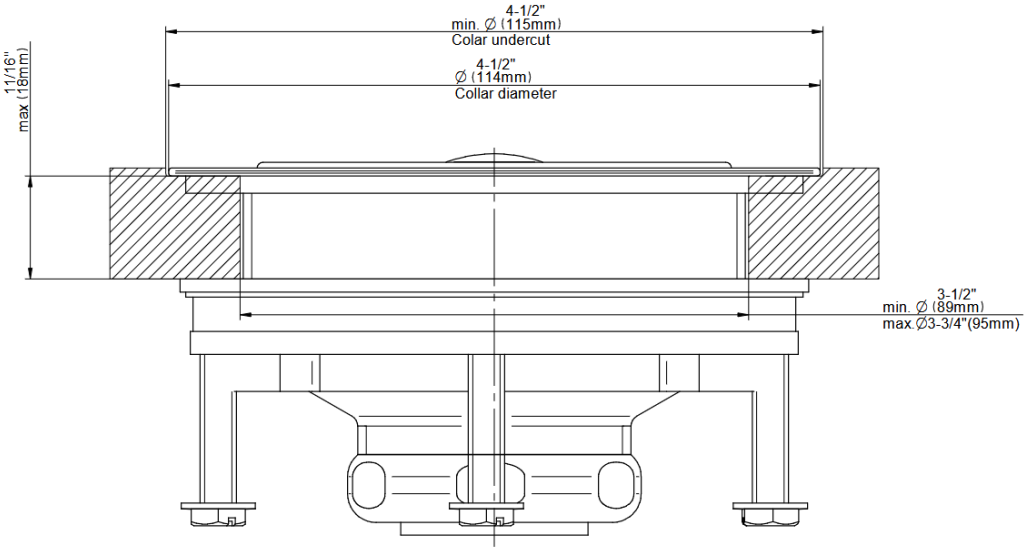

The measurements shown are for reference only. Products and specifications shown are subject to change without notice. Revised 09/2023