G-9925
Soap/Lotion Dispenser

Product Features

- Refillable from top
- 8.5 fluid ounce capacity

Available Finishes

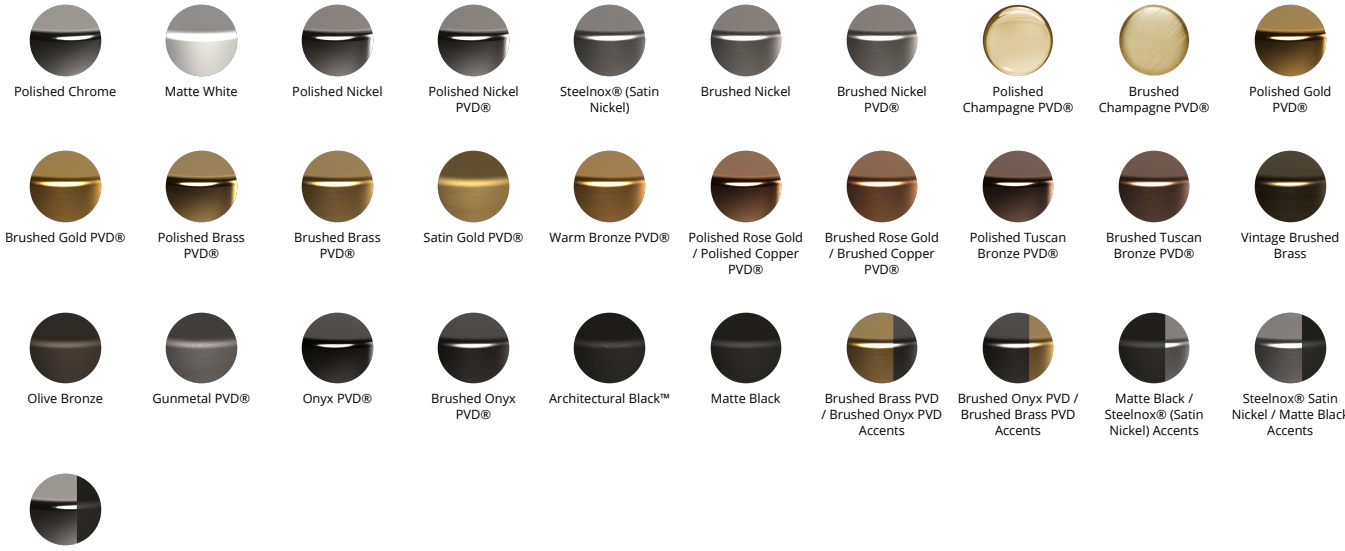
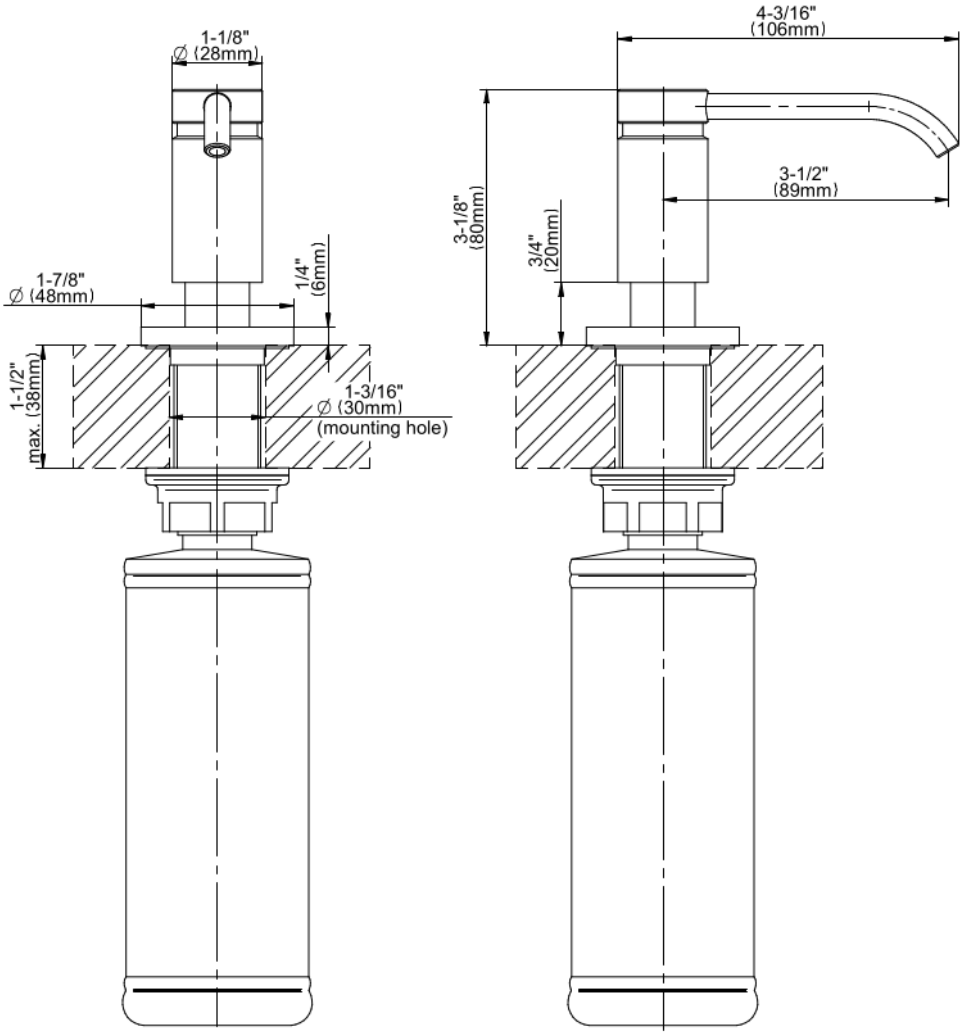
G-9925
Soap/Lotion Dispenser