Harley Collection
G-9924
Harley Soap/Lotion Dispenser

Product Features

- Refillable from top
- 8.5 fluid ounce capacity

Available Finishes

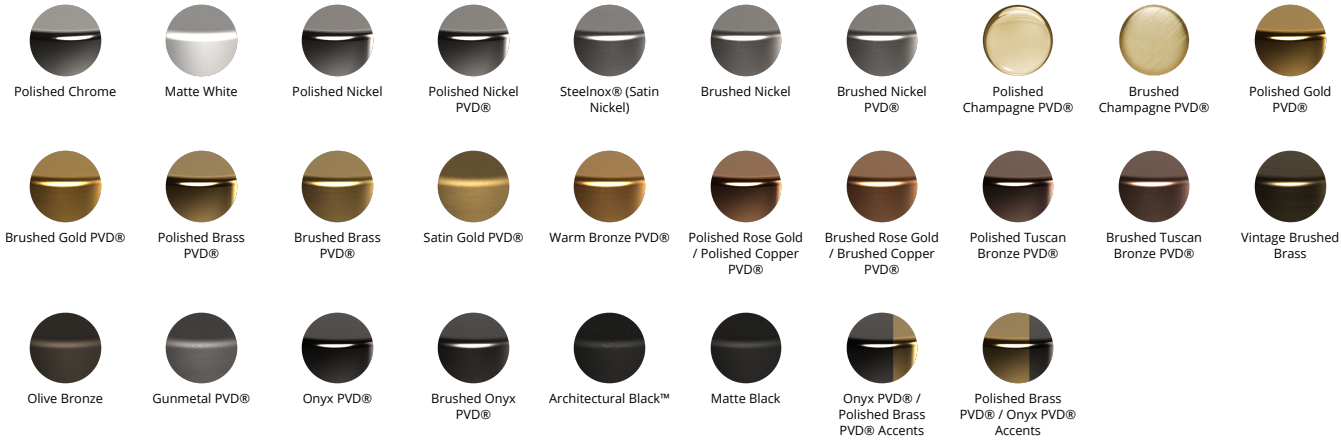
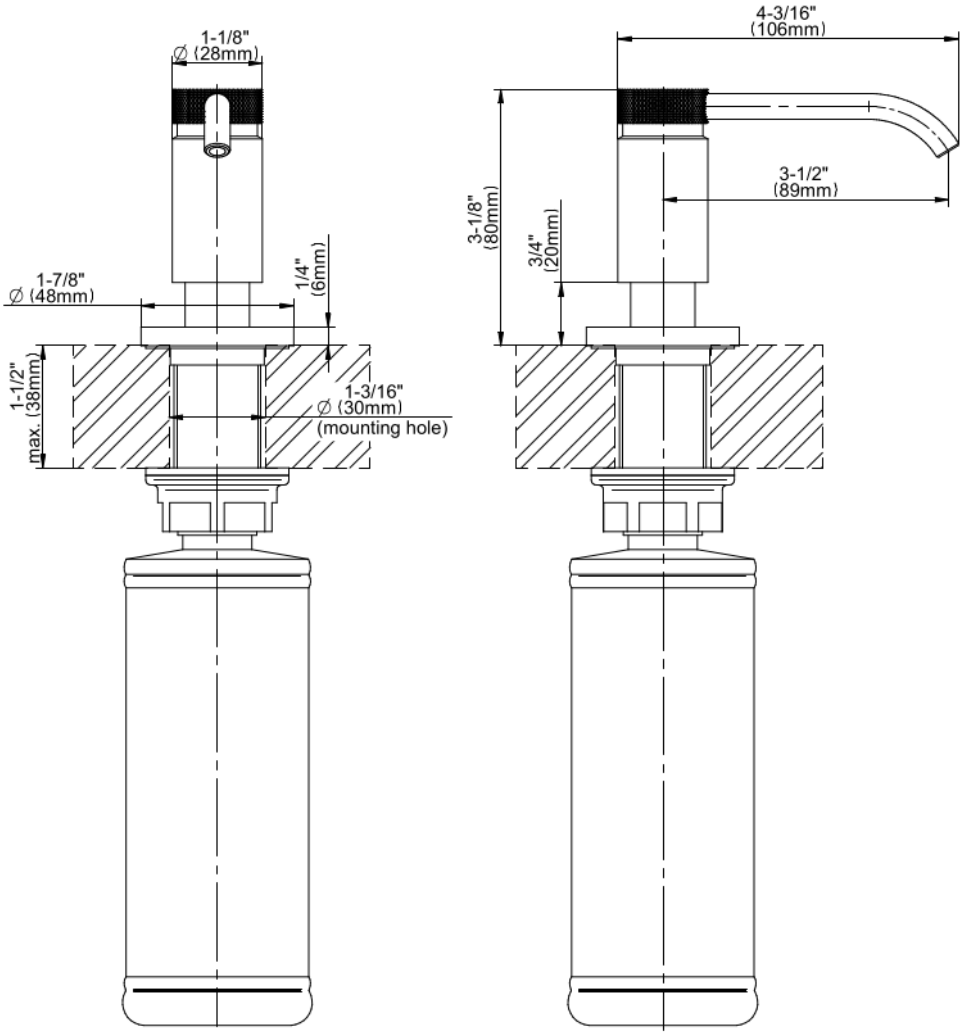
Harley Collection
G-9924
Harley Soap/Lotion Dispenser