Segovia Collection
G-9928
Segovia Soap/Lotion Dispenser

Product Features

- Refillable from top
- 8.5 fluid ounce capacity

Available Finishes

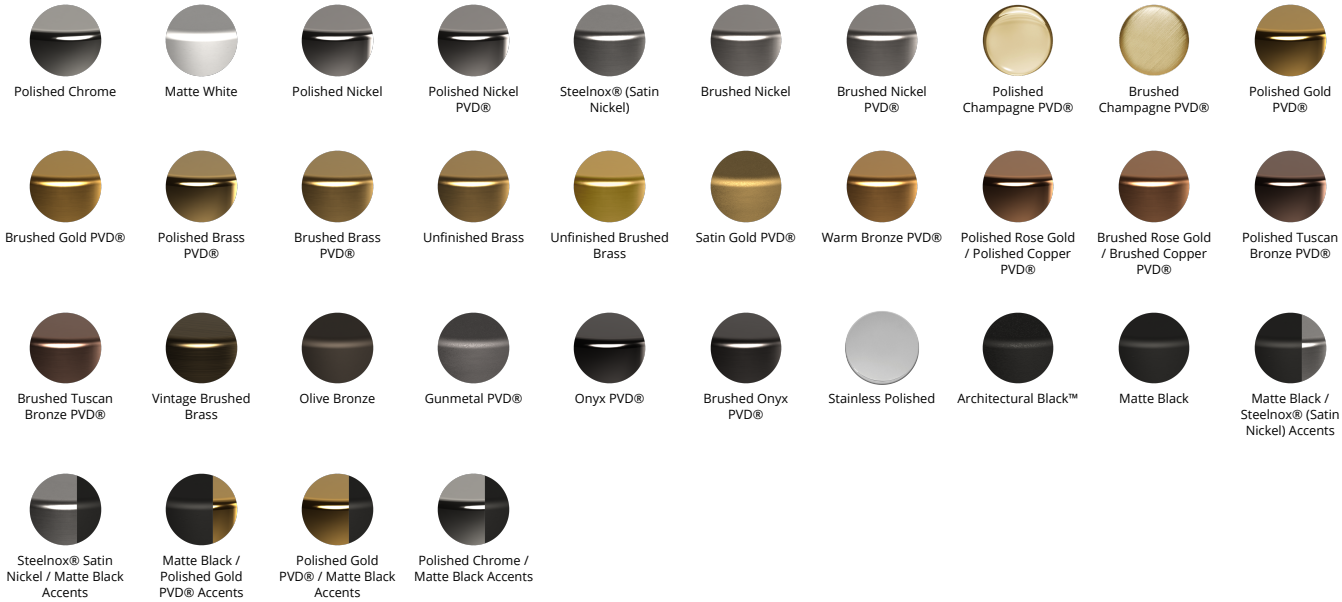
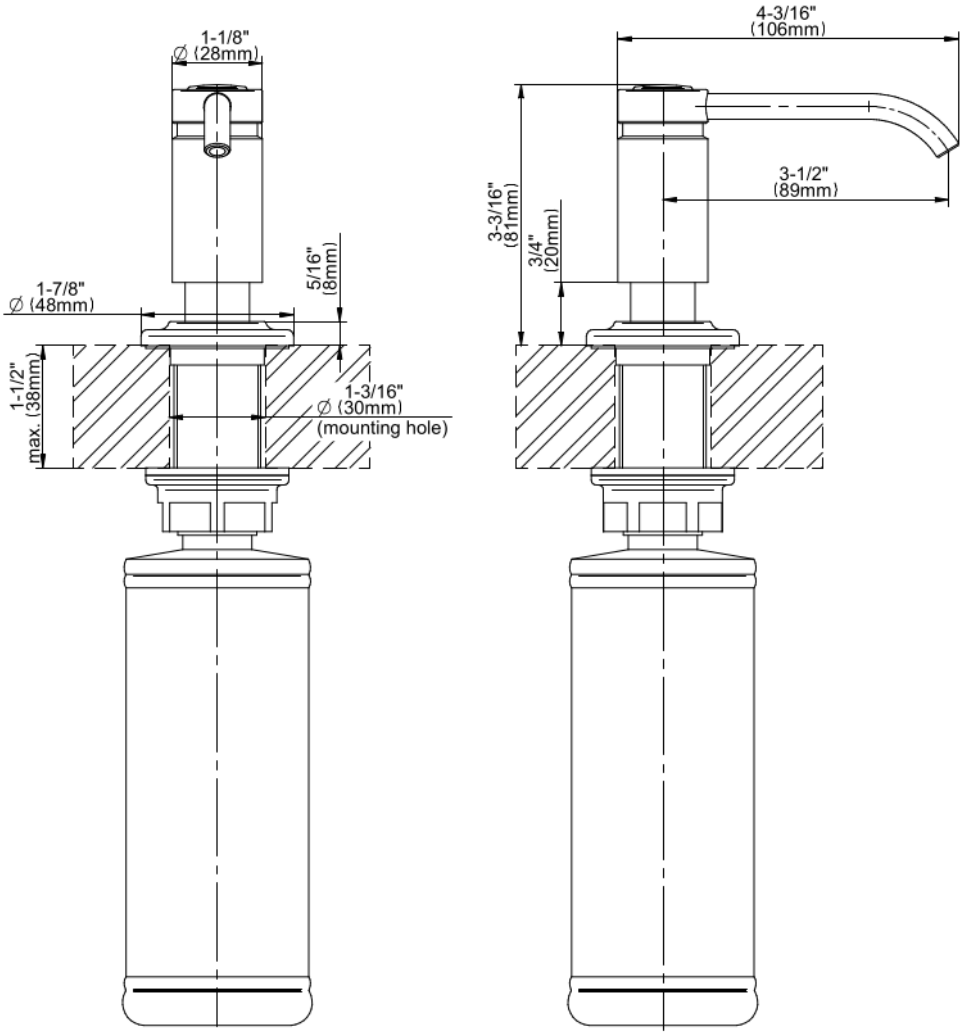
Segovia Collection
G-9928
Segovia Soap/Lotion Dispenser